BYD Battery-Box Premium

Operating Manual

LVL 15.4

BYD Europe B.V. V1.0

Legal Provisions

All the information in this document is the property of BYD Europe B.V. No part of this document could be reproduced in any way for business use. Internal use is allowed.

BYD Europe B.V. makes no representations or warranties express or implied, with respect to this document or any of the equipment and firmware it may describe, including (with no limitation) any implied warranties of utility, merchantability, or fitness for any particular purpose. All such representations or warranties are expressly disclaimed. Neither BYD Europe B.V. nor its distributors or dealers shall be liable for any indirect, incidental, or consequential damages under any circumstances.

The exclusion of implied warranties may not apply in all cases under some statutes, and thus the above exclusion may not apply.

Specifications are subject to change without notice. Every effort has been made to make this document complete, accurate, and up-to-date. However, BYD Europe B.V. may need to make some improvements under certain circumstances without advance notice. BYD Europe B.V. shall not be responsible for any loss caused by this document, including, but not limited to, omissions errors, typographical errors, arithmetical errors, or listing errors in this document.

All trademarks are recognized.

Limited Warranty

You can download the latest Limited Warranty from the Internet on websites:

BYD Global Service, *www.bydbatterybox.com*,

BYD service partner in Europe, *www.eft-systems.de*,

BYD service partner in Australia, *www.alpspower.com.au*.

BYD Europe B.V.

‘s-Gravelandseweg 256, 3125 BK, Schiedam, the Netherlands

Content

Legal Provisions 2

1. Information on this Document 6

1.1. Validity 6

1.2. Target Group 6

1.3. Content and Structure of This Document 6

1.4. Levels of Warning Messages 6

1.5. Symbols in the Document 7

1.6. Designation in the Document 7

2. Safety 8

2.1. Intended Use 8

2.2. Important Safety Instructions 8

2.3. Battery module leakage 8

2.4. Firefighting measures 9

2.5. Battery modules handling and storage guide 9

2.6. Surge protection 10

2.7. Caution of Weight 10

2.8. Notice of Property Damage 10

2.9. Safety information of an inverter manufacturer 11

2.10. Output Short-circuit Current and Protective Device Characteristics 11

3. Scope of Delivery 12

4. Battery System Overview 13

4.1. Battery System Description 13

4.2. Interface 14
4.3. Symbols on the Battery System 14
4.4. LED Signals 16
5. Installation 17
5.1. Requirements for Installation 17
5.2. Installation 17
5.2.1. Needed Tools 17
5.2.2. Single Battery System Installation 18
5.2.3. Single Stack Installation 19
5.2.4. Multiple Stacks Installation 20
6. Electrical Connection 21
6.1. Connection Diagram 21
6.1.1. Single battery system 21
6.1.2. Single Stack of Battery System 22
6.1.3. Multiple Battery Systems 23
6.2. Single Battery System Connection 23
6.2.1. Connect grounding conductor 23
6.2.2. Internal Communication Cable Connection 24
6.2.3. Internal power cable connection 25
6.2.4. Data Cable Connection to BMU 26
6.2.5. DC Cable Connection to Inverter 26
6.2.6. Close the Front Cover 26
6.3. Single Stack Connection 26
6.4. Multiple Battery System Connection 28

7. Commissioning 28
7.1. Commission the Battery System 28
7.2. Configure the Battery System 29
7.3. Commission the Inverter 30
7.4. Stop the system 30
8. Decommissioning 31
9. Extension 32
10. Trouble Shouting 32
10.1. Overview 32
10.2. Error codes on BMU 32
10.3. Error codes on BMS 33
11. Maintenance and Clean 33
11.1. Cleaning 33
11.2. Maintenance 33
12. Disposal of Battery Systems 34
13. Technical Data 35
14. Declaration of Conformity 36
15. Contact Information 37

1. Information on this Document

1.1. Validity

This document is valid for the Battery-Box Premium LVL 15.4 from firmware version 1.0.

1.2. Target Group

The instructions in this document may only be performed by qualified persons who must have the following skills:

- Knowledge of how batteries work and are operated
- Knowledge of how an inverter works and is operated
- Training in dealing with the hazards associated with the installation and operation of electrical equipment and batteries
- Training in the installation and commissioning of electrical equipment
- Knowledge of, and adherence to the locally applicable connection requirements, standards, and directives
- Knowledge of, and adherence to this document and the associated system documentation, including all safety instructions

1.3. Content and Structure of This Document

This document describes the mounting, installation, commissioning, configuration, troubleshooting, and decommissioning of the battery system.

1.4. Levels of Warning Messages

The following levels of warning messages may occur when handling the battery system.

⚠ DANGER
Indicates a hazardous situation which, if not avoided, will result in death or serious injury.

⚠ WARNING
Indicates a hazardous situation which, if not avoided, could result in death or serious injury.

⚠ CAUTION
Indicates a hazardous situation which, if not avoided, could result in minor or moderate injury.

NOTICE
Indicates a situation which, if not avoided, can result in property damage.

1.5. Symbols in the Document

⚠ QUALIFIED PERSON	Sections describing activities to be performed by qualified persons only

1.6. Designation in the Document

Designation in this document	Complete designation
battery system	Battery-Box Premium LVL 15.4
BMS	Battery Management System
BMU	Battery Management Unit
BIC	Battery Information Collector
BYD	BYD Europe B.V.
MOSFET	Metal-Oxide-Semiconductor Field-Effect Transistor

SOC	State of Charge
SPI	Serial Peripheral Interface

2. Safety

2.1. Intended Use

BYD Battery-Box Premium LVL 15.4 is for residential and small business use and works with a photovoltaic system. It is a 48V Li-ion battery storage system. It could be operated in either off-grid or on-grid mode with compatible inverters.

The battery system could be connected with the Internet through network cable for maintenance and firmware updates.

The battery system must only be used as stationary equipment.

The battery system is suitable for indoor use only.

The battery system must only be operated in connection with a compatible inverter. The list of these inverters could be read at BYD Battery-Box Premium LVL Minimum Configuration List on our websites.

The type label should always be attached to the battery system.

Any use of the battery system other than that described in the Intended Use section does not qualify as the intended use.

This document does not replace and is not intended to replace any local, state, provincial, federal, or national laws, regulations, or codes applicable to the installation, electrical safety, and use of the system. BYD assumes no responsibility for the compliance or non-compliance with such laws or codes in connection with the installation of the battery system.

2.2. Important Safety Instructions

The battery system has been designed and tested in accordance with international safety requirements. However, in order to prevent personal injury and property damage and ensure long-term operation of the battery system, please do read this section carefully and observe all safety information at all times.

2.3. Battery module leakage

If the battery modules leak electrolytes, contact with the leaking liquid or gas should be avoided. The electrolyte is corrosive, and the contact may cause skin irritation and chemical burns. If one is exposed to the leaked substance, do these actions:

Inhalation: Evacuate the contaminated area and seek medical help immediately.

Eye contact: Rinse eyes with flowing water for 15 minutes and seek medical help immediately.

Skin contact: Wash the affected area thoroughly with soap and water and seek medical help immediately.

Ingestion: Induce vomiting and seek medical help immediately.

2.4. Firefighting measures

The battery modules may catch fire when it is put into the fire. In case of a fire, please make sure that an ABC or carbon dioxide extinguisher is nearby. Water cannot be used to extinguish the fire.

Full protective clothing and self-contained breathing apparatus are required for the firefighters to extinguish the fire.

2.5. Battery modules handling and storage guide

The battery modules and its components should be protected from damage when transporting and handling.

The weight of the battery system may cause injury risk. Please take the weight of the battery system into account while the battery system is transported and lifted carefully.

- Do not impact, pull, drag, or step on the battery modules.
- Do not insert unrelated objects into any part of the battery modules.
- Do not throw the battery module into a fire.
- Do not soak the battery modules in water or seawater.
- Do not expose to strong oxidizers.
- Do not short circuit the battery modules.
- The battery modules cannot be stored at a high temperature (more than 50 °C).
- The battery modules cannot be stored directly under the sun.
- The battery modules cannot be stored in a high humidity environment.
- Use the battery modules only as directed.
- Do not use the battery modules if it is defective, or appears cracked, broken or otherwise damaged, or fails to operate.

• Do not attempt to open, disassemble, repair, tamper with, or modify the battery modules. The battery modules are not user-serviceable.

• Do not use cleaning solvents to clean the battery modules.

2.6. Surge protection

⚠ DANGER

Danger to life due to electric shock in case of overvoltages and if surge protection is missing

Overvoltages (e. g. in the event of a flash of lightning) can be further conducted into the building and to other connected devices in the same network via the network cables or other data cables if there is no surge protection. Touching live parts and cables results in death or lethal injuries due to electric shock.

- Ensure that all devices in the same network and the inverter are integrated into the existing surge protection.
- When laying the network cables or other data cables outdoors, it must be ensured that a suitable surge protection device is provided at the transition point of the cable from the system or the inverter outdoors to the inside of a building.

2.7. Caution of Weight

⚠ CAUTION

Risk of injury due to weight of battery modules

Injuries may result if the battery system is lifted incorrectly or dropped while being transported or when attaching it to or removing it.

- Transport and lift the system carefully. Take the weight of the battery system into account.
- Wear suitable personal protective equipment for all work on the battery system.

2.8. Notice of Property Damage

NOTICE
Damage to the battery system due to under voltages • If the battery system doesn't start at all, please contact BYD local after-sales service within 48 hours. Otherwise, the battery could be permanently damaged.

2.9. Safety information of an inverter manufacturer

Please read and observe all safety information of the inverter manufacturer.

2.10. Output Short-circuit Current and Protective Device Characteristics

When the discharging current is bigger than 600A, the BMS short circuit protection (about 100uS delay) is triggered. The main circuit MOSFET will be closed first. Then the main circuit will be open. The battery system will stop discharging.

The circuit breaker information could be read below.

Rated current	250A
Breaking capacity	25KA 415AC
Poles number	2P
Rated voltage	600VAC, 250VDC

3. Scope of Delivery

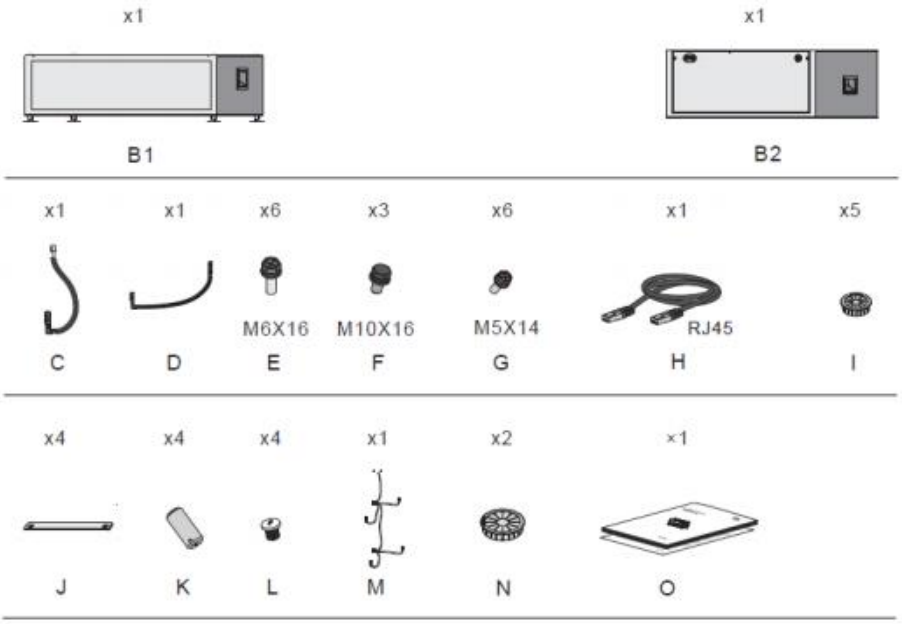

Position	Designation
B1	Battery module 1
B2	Battery module 2
C	Power cable L2
D	Power cable L3
E	Screw M6×16
F	Screw 10×16
G	Screw M5×14
H	Network cable
I	Grommets (small size)
J	Bonding strip for connecting and fixing B1 and B2
K	Alignment pins

L	Plastic bolts for fixing B2`s top covers
M	Internal communication cable
N	Grommets (big size)
O	Quick Start Guide, Minimum Configuration List

4. Battery System Overview

4.1. Battery System Description

The BYD Battery-Box Premium LVL 15.4 is used as a connected battery for the intermediate storage of excess PV energy in an inverter system.

It works together with Battery-Box Premium LV BMU. The parameters and instruction of BMU could be read on our websites. With its control and communication port (BMU), the battery system is capable of scaling to meet the different project requirements. The battery system could support the backup function of inverters and is compatible with both 1 and 3 phase inverters.

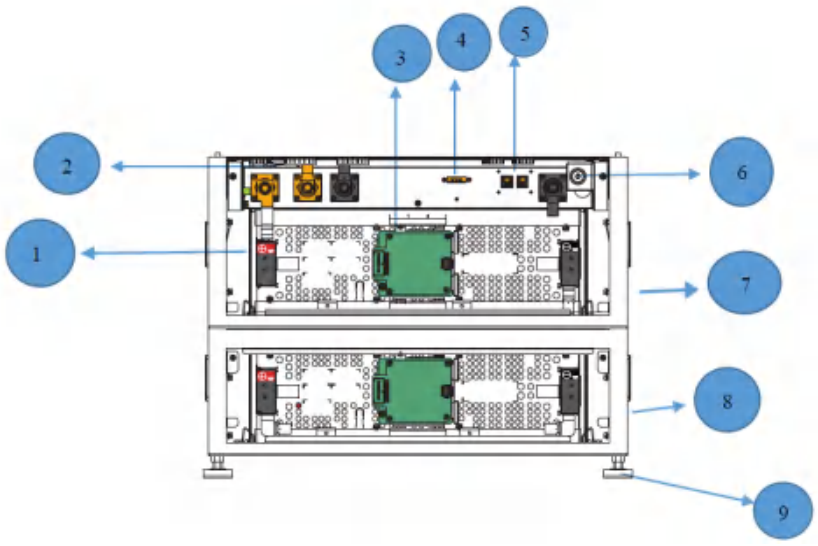

Position	Designation
1	Terminal
2	Power cable port
3	BIC board

4	SPI port
5	COM port
6	Start/Stop button with LED
7	B2 module
8	B1 module
9	Foot

4.2. Interface

WLAN

BMU is equipped with a WLAN interface as a standard.

Be Connect

Be Connect is an app for cell phones. You can download it from Google Play or App Store.

With Be Connect, you can update the firmware of the battery system and configure it. The battery system can operate only after configured.

Be Connect Monitoring

BMU is equipped with an Ethernet interface as a standard. When your battery system is linked with the Internet, it will join our Be Connect Monitoring system. Be Connect Monitoring is a platform for BYD to provide remote service to customers. It can diagnose your battery system, and update the firmware.

It is highly recommended you to connect the battery system to the Internet.

4.3. Symbols on the Battery System

Symbol	Explanation
	Observe the documents Observe all documents supplied with the battery system.

	Grounding conductor This symbol indicates the position for connecting a grounding conductor.
	WEEE designation Do not dispose of the battery system together with the household waste but in accordance with the disposal regulations for electronic waste applicable at the installation site.
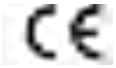	CE marking The battery system complies with the requirements of the applicable EU directives.
	Place it straight up, without inclination or upside down.
	Handle with care
	Keep it dry
	Keep the battery modules away from open flame or ignition sources.
	Beware of electrical voltage.
	Beware of a danger zone This symbol indicates that the system must be additionally grounded if additional grounding or equipotential bonding is required at the installation site.
	Keep the battery modules away from children.
	Beware of hot surface The battery system can get hot during operation.

Do not short circuit.

4.4. LED Signals

Flashing white and blue alternatively	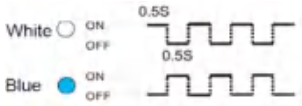	BMU and the battery system are initiating.
Glowing white		Idle (the battery system is neither charging nor discharging).
Flashing white slowly	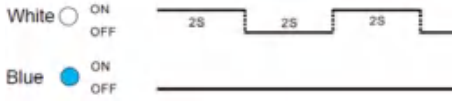	The battery system is charging.
Flashing white quickly	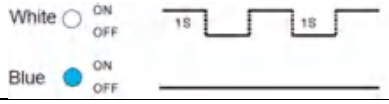	The battery system is discharging.
Flashing white and glowing blue	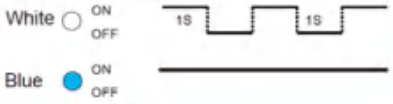	The battery system is discharging, and the SOC of it is below 15%.
Flashing white and blue	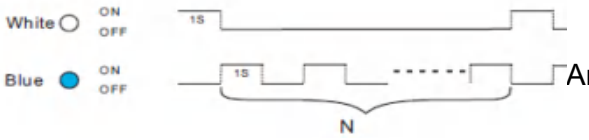	An error has occurred.

5. Installation

* For the Australian market , please follow the local standards AS/NZS 5139 and wiring rules. You also can find some special requirements from standards AS/NZS 5139 in appendix A

5.1. Requirements for Installation

Requirements for installation location:

a) A solid support surface must be available (e.g., concrete or masonry).

b) The installation location must be inaccessible to children.

c) The installation location must be suitable for the weight and dimensions of the system.

d) The installation location must not be exposed to direct solar irradiation.

e) The installation location must not be close to the fire.

f) The altitude of the installation location should be less than 3000m.

g) The ambient temperature should be between -10°C and +50°C.

5.2. Installation

⚠ QUALIFIED PERSON

⚠ CAUTION

Risk of injury due to weight of battery module

Injuries may result if the battery system is lifted incorrectly or dropped while being transported or when attaching it to or removing it.

- Transport and lift the battery system carefully. Take the weight of the system into account.
- Wear suitable personal protective equipment for all work on the battery system.

5.2.1. Needed Tools

Name	Reference picture
Diagonal Pliers	
Torque Wrench	

Screwdrivers	
Wrench	

5.2.2. Single Battery System Installation

Procedure:

1. Unpack the battery system.

2. Pile B2 above B1. Make sure the two alignment pins are in the right place.

3. Screw up the four plastic bolts on the top cover of the B2 module.

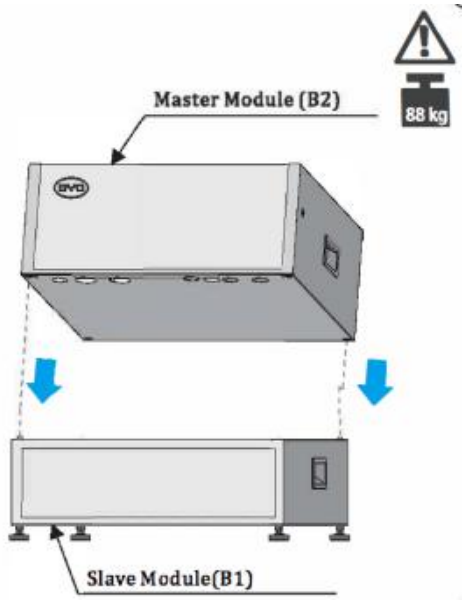

4. Remove the front covers of B2 and B1. When removing the front cover of B2, disconnect the cable behind the Start/ Stop button first.

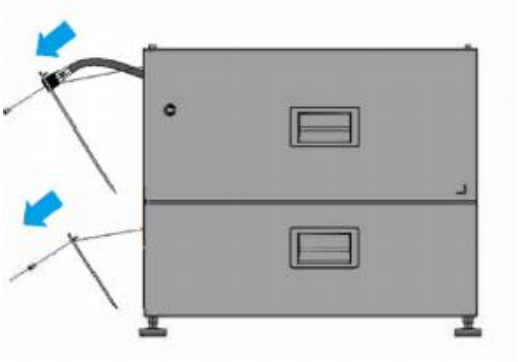

5. Insert the grommets in holes.

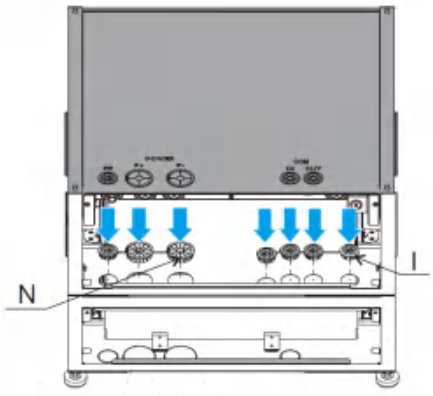

6. Use the bonding strips to fix B1 and B2 with screws M5×14.(Torque, 4.5 Nm)

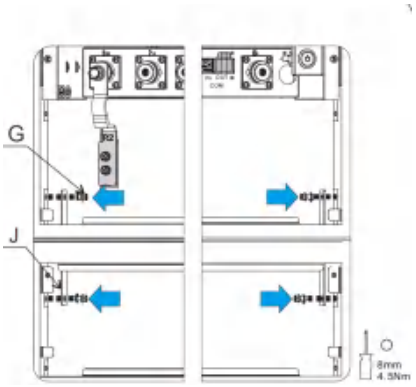

5.2.3. Single Stack Installation

Maximum of two battery systems could be piled up. Two battery systems installed like that could be called a single stack.

Procedure:

1. Unpack the first battery system package.
2. Pile B2 above B1.
3. Unpack the second battery system package.
4. Remove the front cover of B1 of the second battery system.

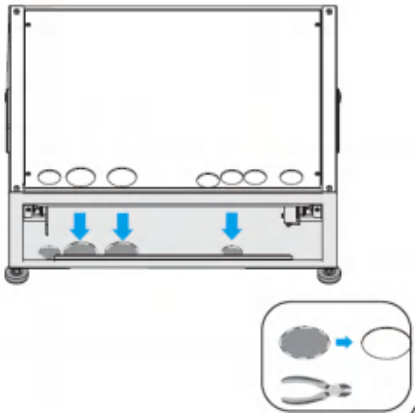

5. Empty cable holes of B1 (the second battery system) with diagonal pliers;
6. Pile B1 (the second battery system) above B2 (the first battery system). (not right above, but with an angle)

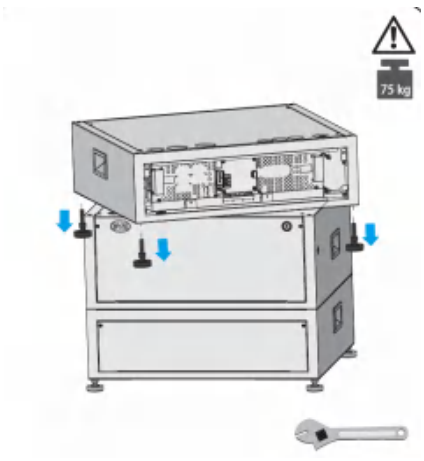

7. Remove four feet of B1 (the second battery system) with a wrench.

8. Insert two alignment pins on top of B2 (the first system).

9. Pile B2 (the second battery system) right above B1 (the second battery system).

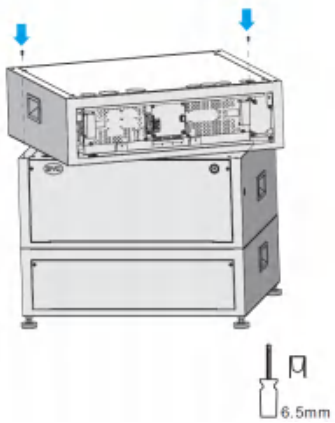

10. Screw up four plastic bolts on top of the B2 (the second battery system).

11. Remove fronts covers. When removing the front covers of B2 in both battery systems, disconnect the cable behind the Start/Stop button first.

12. Insert grommets on both battery systems.

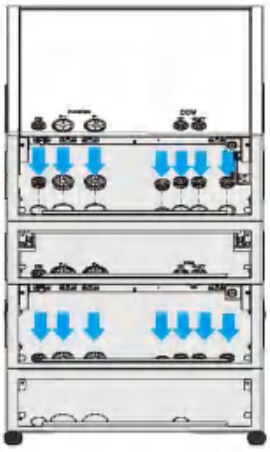

13. Fix B2 and B1 in both two battery systems and between B2 (the first battery system) and B1 (the second battery system) with six bonding strips.

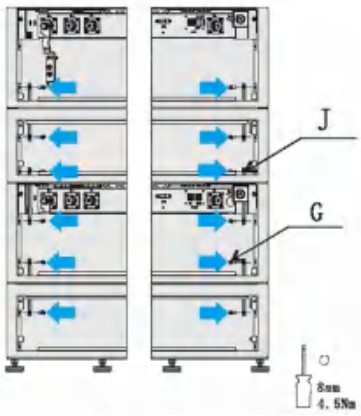

5.2.4. Multiple Stacks Installation

For multiple stacks installation, permissible positions could be read in the right-hand side drawing. A minimum of 20 mm should be reserved between the side of the battery system, and a minimum of 750 mm should be reserved between the front and back of the battery systems.

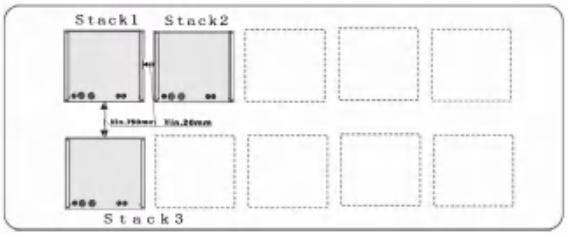

6. Electrical Connection

6.1. Connection Diagram

6.1.1. Single battery system

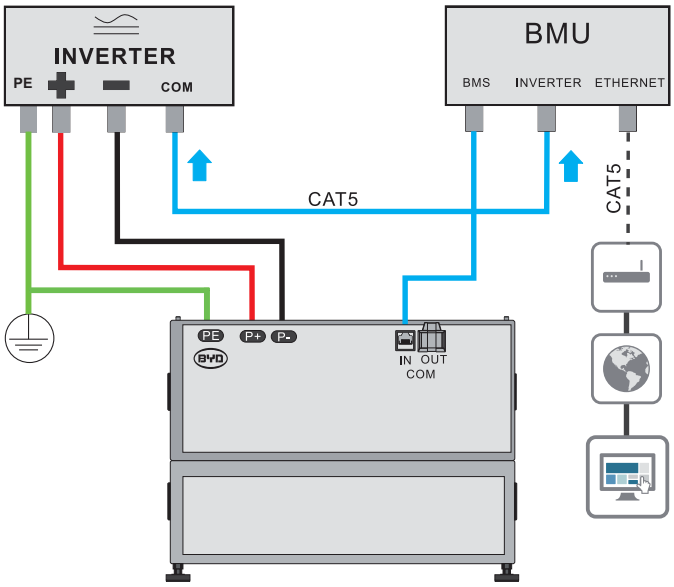

The designation of the INVERTER port on BMU could be read below.

.	No.	Assignment
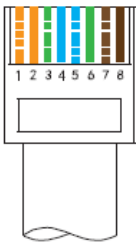	1	485-A
	2	485-B
	3	Unused
	4	CAN H
	5	CAN L
	6	Unused
	7	Unused
	8	Unused

Our compatible inverters' communication ports with BMU designation could be read below.

	BMU	SMA	GOODWE	VICTRON	SELECTRONIC
CAN H	4	4	4	7	1
CAN L	5	5	5	8	2

6.1.2. Single Stack of Battery System

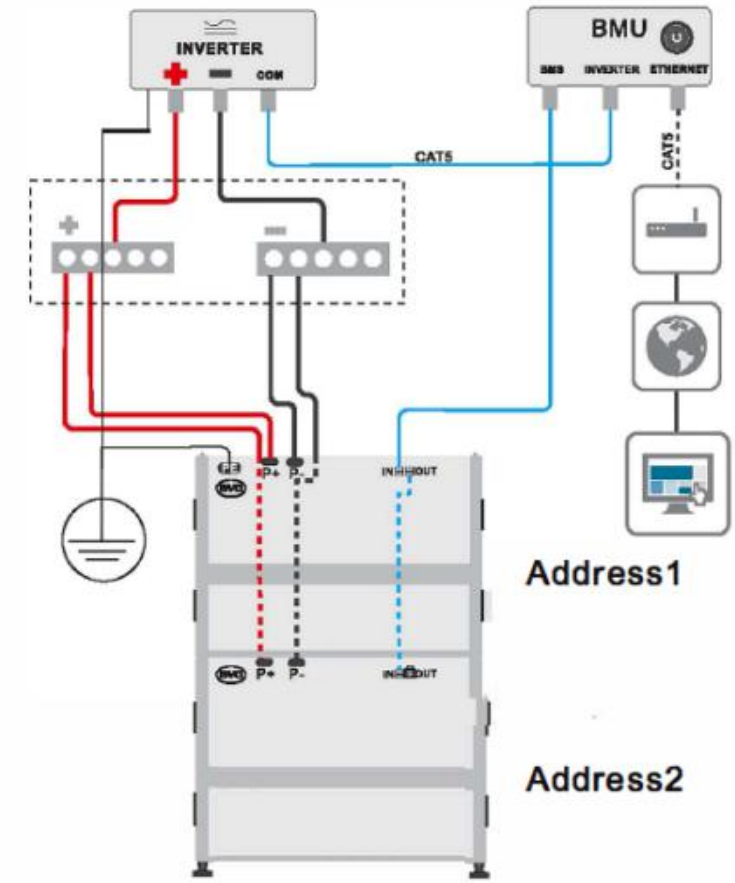

The battery system connected to BMU is appointed as Address 1, and the battery system connected to Address 1 is appointed as Address 2.

6.1.3. Multiple Battery Systems

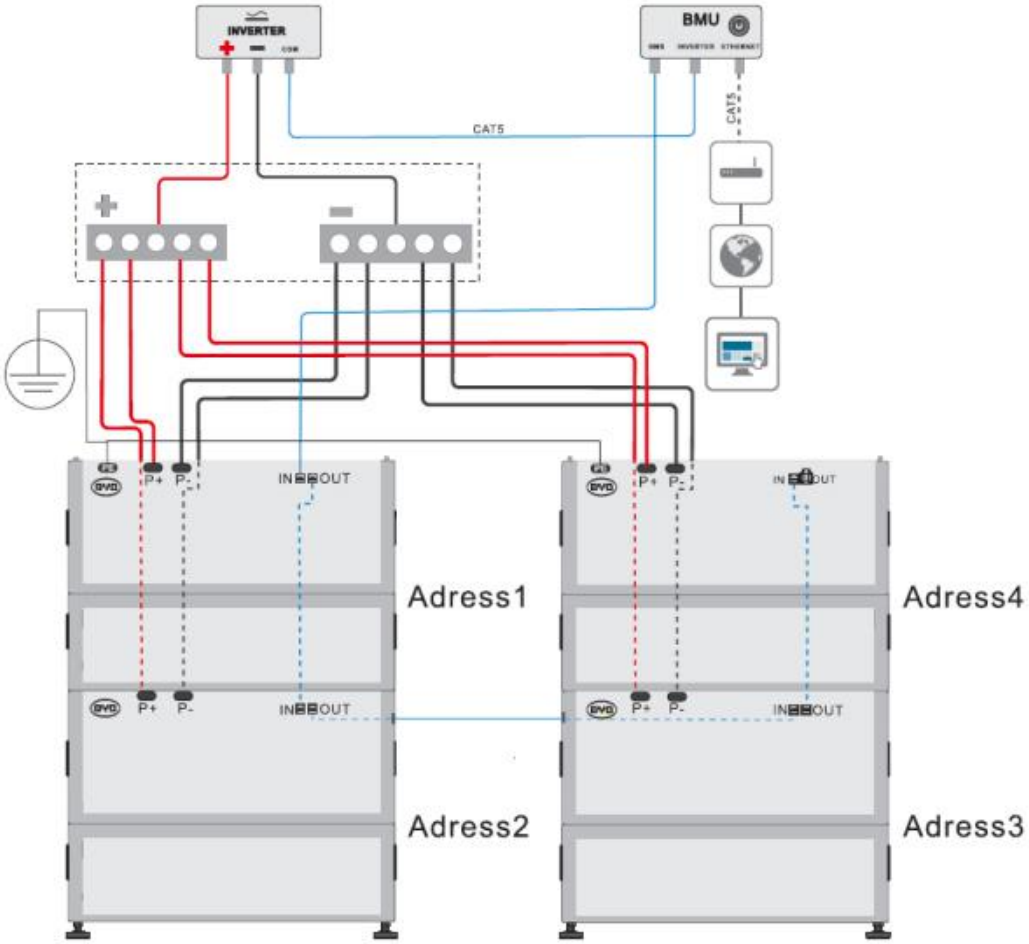

The battery system connected to Address 2 is appointed as Address 3, and so on.

6.2. Single Battery System Connection

⚠ QUALIFIED PERSON

6.2.1. Connect grounding conductor

Additionally required mounting material (not included in the scope of delivery):

Grounding cable

Cable requirements:

- Conductor SC16-6
- Grounding cable cross-section: max. 16 mm²

Procedure:

1. Pass the ground conductor through PE port.
2. Connect with grounding point, with a screw M6×12. (Torque, 8Nm).
3. The other side of the grounding cable should be connected to the common ground. It is recommended to join the grounding cable of the inverter.

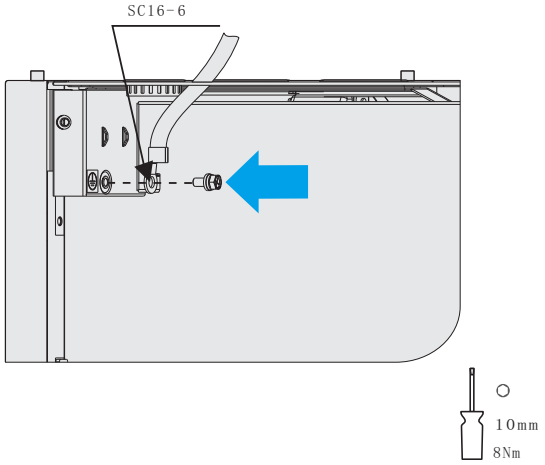

6.2.2. Internal Communication Cable Connection

Procedure:

1. Pass communication cable through the first cable hole on right side of front bottom layer on B2.
2. Connect the communication cable to SPI port and two ports of two BIC boards.
3. Leave the red and black power wires of the communication cable aside.

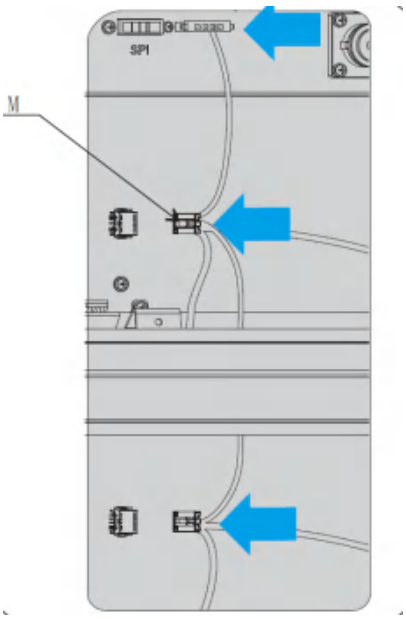

6.2.3. Internal power cable connection

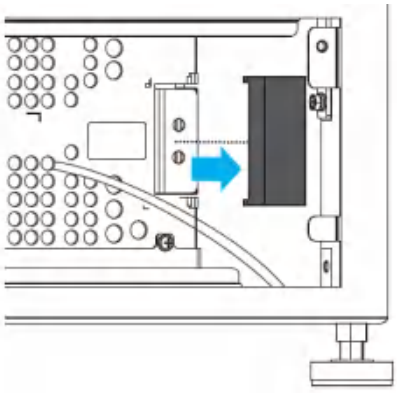

Procedure:

1. Take off the protective cover of B1- (negative terminal of B1); These covers won`t be used again.

2. Pass the cable L2 through the second cable hole on the right side of the front bottom layer on B2.

3. Connect power cable L2 to B- with a screw M10×16.(Torque, 11.5Nm)

4. Connect L2 to B1- (negative terminal of battery module B1) with two screws M6×16. (Torque, 8 Nm) Meanwhile, fix the black power wire connector reserved there between the screw and the battery module terminal.

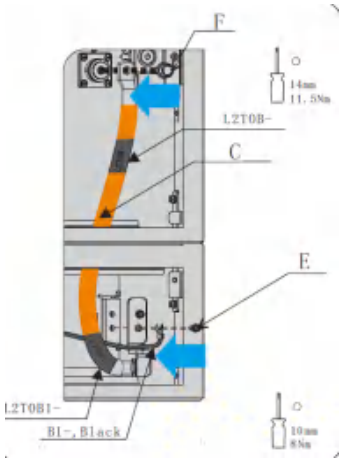

5. Take off protective covers of B1+ (positive terminal of battery module B1) and B2- (negative terminal of battery module B2).

6. Connect power cable L3 to B1+ and B2- with screws M6×16. (Torque, 8Nm) Meanwhile, fix two power wire of the communication cable between the screw and the battery module terminals.

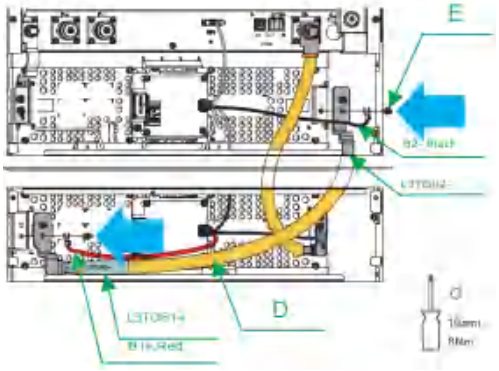

The LED on the BIC board will glow blue for a second once positive and negative power wires of the communication cable are fixed with the battery module terminals.

7. Take off one screw on B2+ (negative terminal of battery module B2) and fix the power wire of the communication cable between the screw and the battery module terminal. (Torque, 8 Nm)

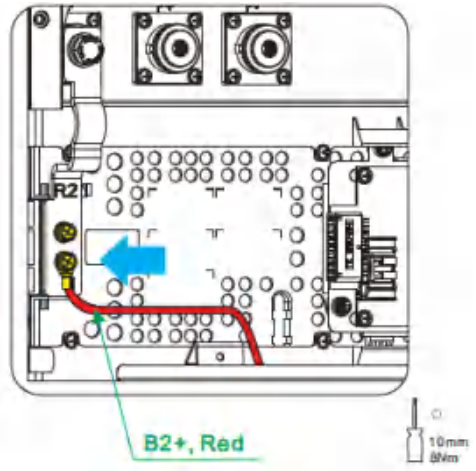

6.2.4. Data Cable Connection to BMU

Procedure:

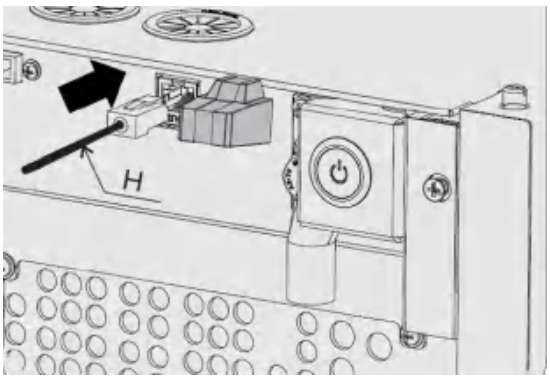

1. Check whether the terminal resistor is at the 'OUT' port. There should be a terminal resistor if only one battery system is operated.

2. Lead the data cable into the battery system through small size grommet above the 'IN' port.

3. Plug one side of the data cable in 'In' port, and the other side to the BMU 'BMS' port.

6.2.5. DC Cable Connection to Inverter

Additionally required mounting material (not included in the scope of delivery):

Two DC power cables

Cable requirements:

- Conductor cross-section: Up to 70 mm², following the requirements of the inverter.
- Maximum cable length: 5 m.
- Conductor SCXX-10

Procedure:

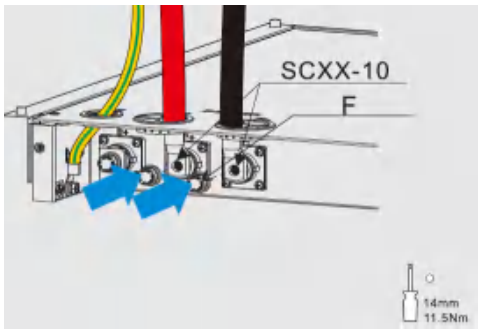

1. Lead the DC cables into the battery system through two big size grommets.

2. Fix the connectors with screws M10X16 by a cylinder wrench 14 mm. (Torque, 11.5 Nm)

6.2.6. Close the Front Covers

After the electrical connection is finished, close the front cover. Connect the cable behind the Start/Stop button first, and then fix the front cover with screws.

6.3. Single Stack Connection

Additionally required installation material (not included in the scope of delivery):

a. Grounding cable

Cable requirements:

- Conductor SC16-6.
- Grounding cable cross-section: max. 16 mm².

b. Two DC power cables

Cable requirements:

- Conductor cross-section: Up to 70 mm², following the requirements of the inverter.
- Maximum cable length: 5 m.
- Conductor SCXX-10.

Procedure:

1. Fix the ground cable at the grounding point of the upper battery system. The bottom battery system doesn`t need to ground anymore.
2. Plug the internal communication cables on each battery system.
3. Fix the internal DC cables (L2, L3) on each battery systems. Fix the three power wires (one red ware and two black wares) of the communication cable meanwhile.
4. Fix the rest of power wires (red) to the B2+ in both battery systems.
5. Fix the data cable to BMU into the 'IN' port in the upper battery system.
6. Remove the terminal resistor on the 'OUT' port of the upper battery system.

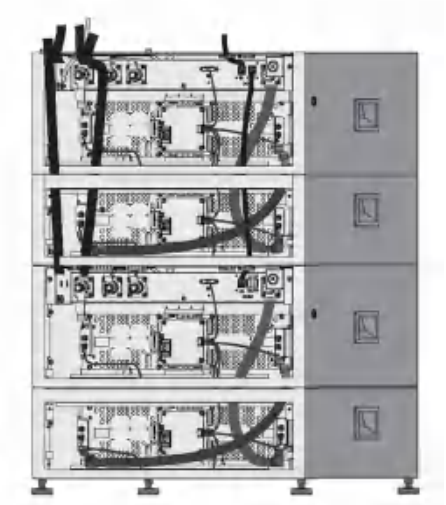

7. Connect the 'OUT' port on the upper battery system and the 'IN' port of the bottom battery system with a data cable.
8. Lead two DC power cables into the bottom battery system through the big size grommets of the upper battery system and the bottom battery system. Fix the DC connectors with screws M10X16. (Torque, 11.5 Nm)
9. Lead two cables into the upper battery system through the big size grommets of the upper battery system. Fix the DC connectors with screw M10X16. (Torque, 11.5 Nm)
10. A junction box is needed if more than one battery system is operated. Please follow the locally applicable connection requirements, standards, and directives and the requirements of the inverter manufacturer to install the junction box.

6.4. Multiple Battery System Connection

For multiple battery systems, the connection method is similar.

There is a hole with a grommet at the left side wall of the battery system near the 'OUT' port. The internal data cable could go through the hole to connect another battery system.

Each stack should have a grounding cable. And all the grounding cables should be connected.

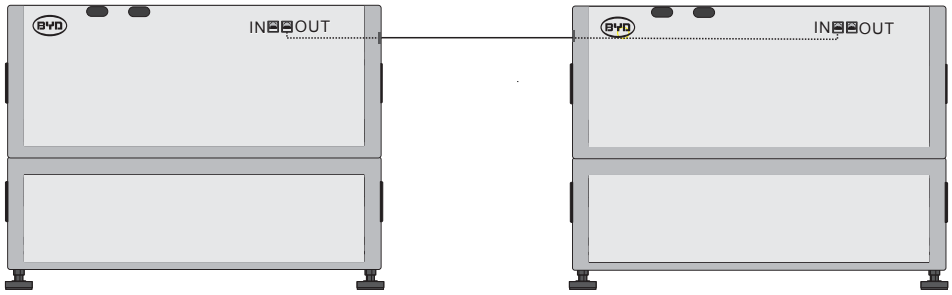

7. Commissioning

7.1. Commission the Battery System

⚠ QUALIFIED PERSON

Requirements:

- The power cable connection between the battery system and the inverter is switched off.
- The inverter must be correctly mounted.
- All cables must be correctly connected.
- The BMU must be correctly connected. (It is recommended not to connect the BMU to the router during the configuration. It may affect the communication quality between the cell phone and the BMU)

Procedure:

1. Press the Start/Stop button on the battery system for 3 seconds. If more than one battery system is installed in parallel, only the Start/Stop button of Address 1 is needed to press.

2. The LEDs both on BMU and battery system start to flash (0.5s white, 0.5s blue). Then it turns to flash white and blue.
3. If the battery system is failed to switch on, check whether all the electrical connections are correct or not.
4. If the electrical connections are correct, but the battery system is still unable to switch on, contact our local after-sale service within 48 hours.

7.2. Configure the Battery System

⚠ QUALIFIED PERSON

Before the configuration, you need to download Be Connect APP from Google Play or App Store. The battery system requires the latest version firmware to operate. So please make sure you either have downloaded the latest firmware in your cell phone, or your cell phone could access the Internet during configuration.

Procedure:

1. Open Be Connect, allow the app to access your cell phone memory and choose the language.
2. Press Confirm button to continue on the Privacy Policy page. You can also download it if the Internet is available.
3. On the firmware update page, click the Download Firmware button to download the latest version firmware into your cell phone. If the Internet is not available on-site, you can also use the firmware downloaded in your cell phone.
4. Connect the WLAN of BMU. The name of the WLAN and password could be read on the label of BMU. **If the password couldn`t be found, or it doesn`t work, try the default password 'BYDB-Box'.** It is recommended to turn off cellular data of your cell phone to keep the stability of the connection between the app and the battery system.
5. Click the Update Firmware button to update. If the firmware in your cell phone is a lower version than the one in the battery system, this step cannot move forward.

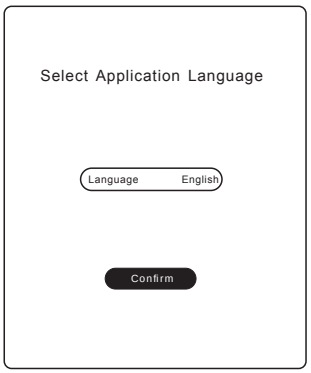

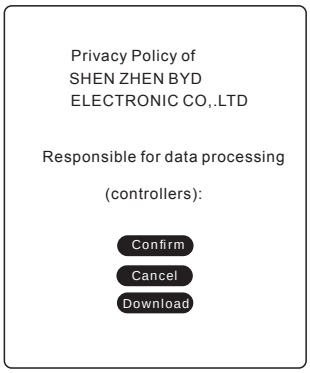

6. After the firmware update, you can set time and choose an inverter brand.

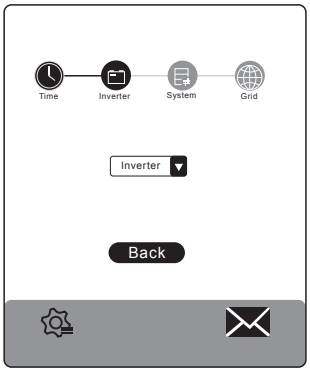

7. Choose LVL and set how many battery systems are installed in parallel.
8. Set grid information.
9. The configuration is completed.

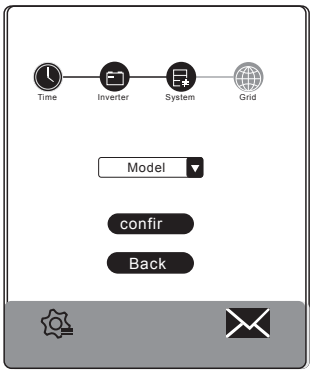

7.3. Commission the Inverter

Procedure:

1. Follow inverter manufacture`s instruction to mount and connect the inverter.
2. Make sure the inverter and BMU are correctly connected.
3. Commission the inverter.
4. Configure the inverter.
5. The status of LEDs on BMU and the battery system changes from flashing white and blue to glowing white.
6. The battery system is ready to work.

7.4. Stop the system

Procedure:

1. Switch off the inverter. Follow the instructions of the inverter manufacture.
2. Switch off the battery system. Press the Stop button of BMU for 5s until LED stops glowing.

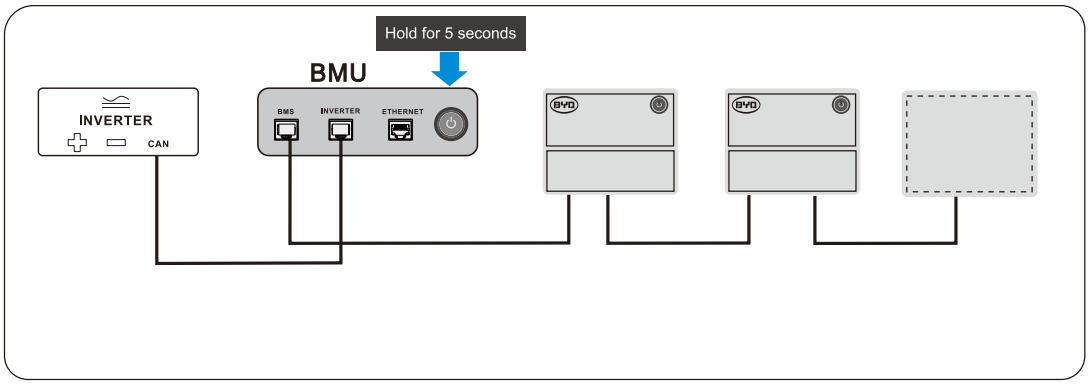

8. Decommissioning

⚠ QUALIFIED PERSON

⚠ CAUTION

Risk of injury due to weight of battery modules

Injuries may result if the battery system is lifted incorrectly or dropped while being transported or when attaching it to or removing it.

- Transport and lift the battery system carefully. Take the weight of the system into account.
- Wear suitable personal protective equipment for all work on the battery system.

Procedure:

1. Shut off the inverter
2. Switch off the breaker between the inverter and the battery system if there is any.
3. Switch off the battery system
4. Remove connections among the battery system, BMU and the inverter.
5. Remove internal DC cables, communication cables, data cables, and grounding cable.
6. Remove connectors between each battery module.

If the battery system is to be stored or shipped, pack it. Use the original packaging or packaging that is suitable for the weight and dimensions of the battery system.

Dispose of the battery system in accordance with the locally applicable disposal regulations for electronic waste.

9. Extension

The battery system could be extended at any time.

The SOC of the existing battery system and the module to be added should be similar before the module adding on the existing system.

Procedure:

1. Get the SOC figure of the new battery module.
2. Charge or discharge the existing battery system to a similar SOC level.
3. Shut off the inverter.
4. Switch off the breaker between the inverter and the battery system if there is any.
5. Switch off the battery system.
6. Install the new battery system and make the connections.
7. Configure the battery system.

10. Trouble Shouting

10.1. Overview

The customer is not supposed to replace or change the parts. If a fault happens, please contact our local after-sales service within 48 hours.

If the white LED flashes once for one second and then blue LED flashes several times (every time one second), that means an error happens. The times of blue LED flashes are the error codes.

10.2. Error codes on BMU

Blue LED is flashing for one time.	Battery system initiating failed
Blue LED is flashing two times.	Address distribution failed
Blue LED is flashing three times.	Precharge failed
Blue LED is flashing for four times.	BMS failure
Blue LED is flashing five times.	BMS and BMU communication failed
Blue LED is flashing six times.	Communication with an inverter failed.

10.3. Error codes on BMS

Blue LED is flashing once	DC cable connection incorrect
Blue LED is flashing two times	MOSFET failure
Blue LED is flashing three times	BIC communication failed
Blue LED is flashing four times	Battery sensor failure
Blue LED is flashing five times	Volt sensor failure
Blue LED is flashing six times	Current sensor failure
Blue LED is flashing seven times	Battery failure
Blue LED is flashing eight times	Precharge failed
Blue LED is flashing nine times	BIC balance failure
Blue LED is flashing ten times	temperature sensor on battery control unit failure
Blue LED is flashing eleven times	BMS and BMU communication failure

11. Maintenance and Clean

11.1. Cleaning

It is recommended that the battery system be cleaned periodically. If the enclosure is dirty, please use a soft, dry brush or a dust collector to remove the dust. Liquids such as solvents, abrasives, or corrosive liquids should not be used to clean the enclosure.

11.2. Maintenance

The battery module should be stored in an environment with a temperature range between -10°C ~ +50°C, and charged regularly according to the table below with no more than 0.5C (150 A) to the SOC of 40% after a long time of storage.

Storage environment temperature	Relative humidity of the storage environment	Storage time	SOC
Below -10℃	/	Not allowed	/
-10~25℃	5%~70%	≤ 12 months	30%≤SOC≤60%
25~35℃	5%~70%	≤ 6 months	30%≤SOC≤60%
35~50℃	5%~70%	≤ 3 months	30%≤SOC≤60%
Above 50℃	/	Not allowed	/

NOTICE

Damage to the battery system due to under voltages

- Charge the over-discharged battery system within seven days when the temperature is above 25°C.
- Charge the over-discharged battery system within fifteen days when the temperature is below 25°C.

12. Disposal of Battery Systems

- Disposal of the system must comply with the local applicable disposal regulations for electronic waste and used batteries.
- Do not dispose of the system with your household waste.
- Avoid exposing the batteries to high temperatures or direct sunlight.
- Avoid exposing the batteries to high humidity or corrosive atmospheres.
- For more information, please contact BYD.

13. Technical Data

Items	Parameters
Number of Modules	2
Usable Energy [1]	15.36 kWh
Max Cont. Output Current [2]	250 A
Max Cont. Input Current [2]	250 A
Max Cont. Output Power [2]	13.5 kW
Max Cont. Input Power [2]	13.5 kW
Peak Output Current [2]	375 A, 5 s
Dimensions (H/W/D)	500 x 575 x 650 mm
Weight	164 kg
Nominal Voltage	51.2 V
Operating Voltage	40-57.6 V
Operating Temperature	-10°C to +50°C
Battery Cell Technology	Lithium Iron Phosphate (cobalt-free)
Communication	CAN/RS485
Enclosure Protection Rating	IP20
Round-trip Efficiency	≥95%
Scalability	Max. 64 in Parallel (983 kWh)
Certification	IEC62619 / CE / CEC / UN38.3

Applications	ON Grid / ON Grid + Backup / OFF Grid
Warranty [3]	10 Years
Compatible Inverters	Refer to BYD Battery-Box Premium LVL Minimum
	Configuration List

[1] Test conditions: 100% DOD, 0.2C charge & discharge at +25°C. The battery system Usable Energy may vary with different inverter brands.

[2] Charge derating will occur between -10°C and +5°C.

[3] Refer to BYD Battery-Box Premium Limited Warranty.

14. Declaration of Conformity

Within the scope of the EU directives

CE

• Low Voltage Directive 2014/35/EU (29.3.2014 L 96/357-374) (LVD)

• Radio Equipment Directive 2014/53/EU (22.5.2014 L 153/62) (RED)

BYD Europe B.V. confirms herewith that the battery systems described in this document are in compliance with the fundamental requirements and other relevant provisions of the above-mentioned directives. The entire EU Declaration of Conformity can be found at our websites.

15. Contact Information

BYD Global Service

bboxservice@byd.com

Telephone: +86 755 89888888-47175

Address:No.3009,BYD Road, Pingshan,Shenzhen,518118,P.R.China

www.bydbatterybox.com

Social media link

https://www.facebook.com/BatteryBoxBYD/

https://twitter.com/BYD_BatteryBox

https://www.linkedin.com/company/byd-battery-box

Australia	Alps Power Pty Ltd service @alpspower.com.au Telephone: +61 2 8005 6688 Address: 14/47-51 Lorraine St Peakhurst NSW 221 www.alpspower.com.au	Europe	EFT-Systems GmbH service@eft-systems.de Telephone +49 9352 8523999 +44 (0) 2037695998(UK) +34 91 060 22 67(ES) +39 02 873683(IT) Address: Bruchtannenstraße 28, 63801 Kleinostheim, Garmany www.eft-systems.de
South Africa	SOLARVILLAGE(PTY)LTD support@afriplusenergy.co.za Telephone: + 27 83 3755 486 Address: UNIT 45 DENNEKAMP, SAILSBURY ROAD, KENILWORTH, CAPE TOWN, WESTERN CAPE, 7708	USA	EFT USA USservice@eft-systems.de Telephone: +1(833) 338-8721 www.eft-systems.de/us

Appendix A Some special requirements of standards AS/NZS 5139 in Australia

This manual should be used together with the local standards AS/ NZS 5139 and AS/ NZS 3000 wiring rules.

1. Installation clearances

For multiple stacks installation, a minimum of 20 mm should be reserved between the side of the battery system, and a minimum of 750 mm should be reserved in the front of the battery systems. Other clearances, please refer to right figure.

Any other distance/clearances' requirements not reminded here, please refer to the standards AS / NZS 5139.

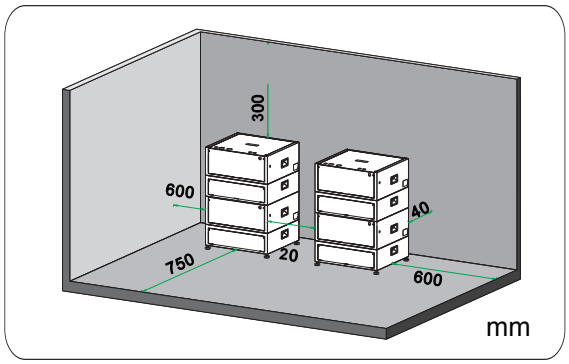

2. Electrical Connection - Connection Diagram

2. 1. Single battery system

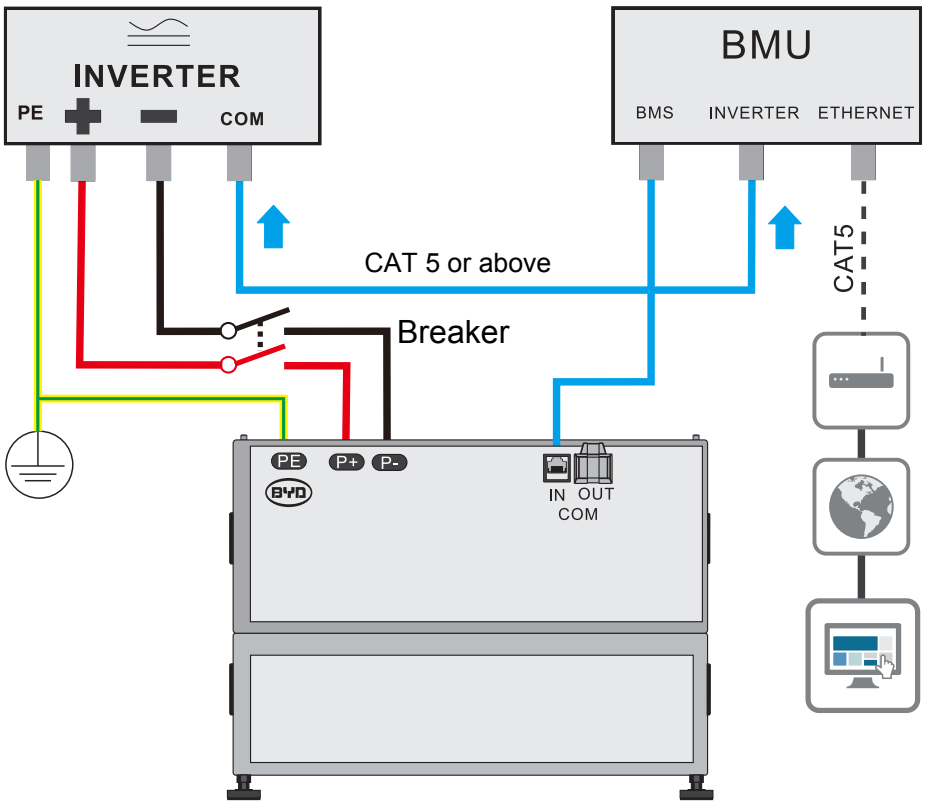

2. 2. Single stack of battery system

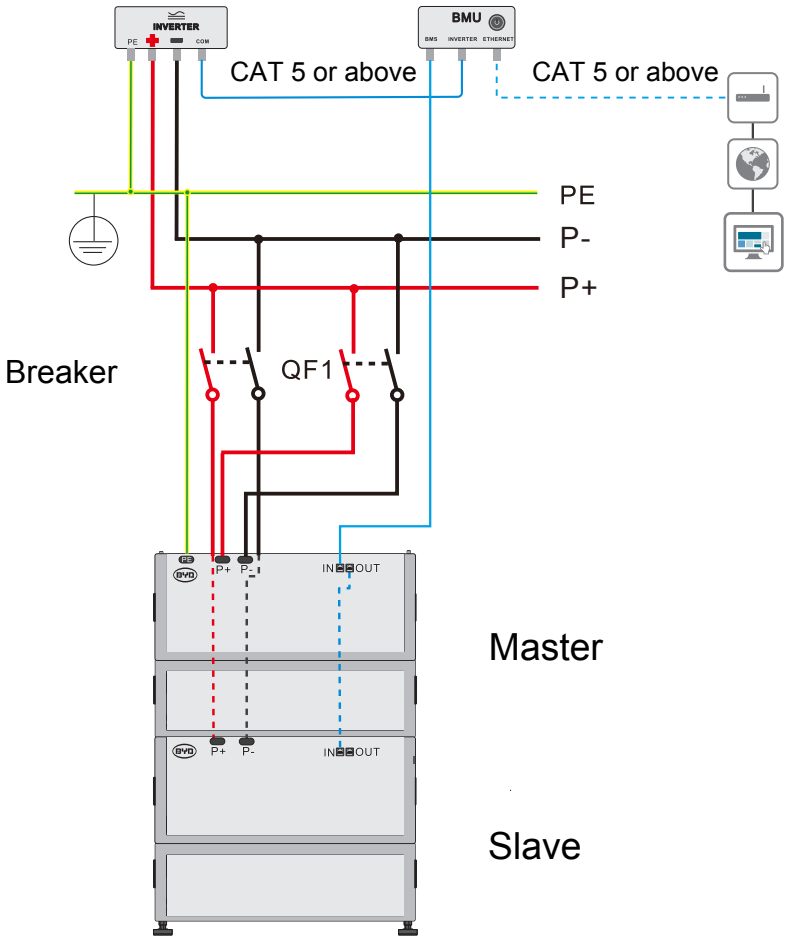

The battery system connected to BMU is appointed as Master, and the battery system connected to Slave

2. 3. Multiple battery system

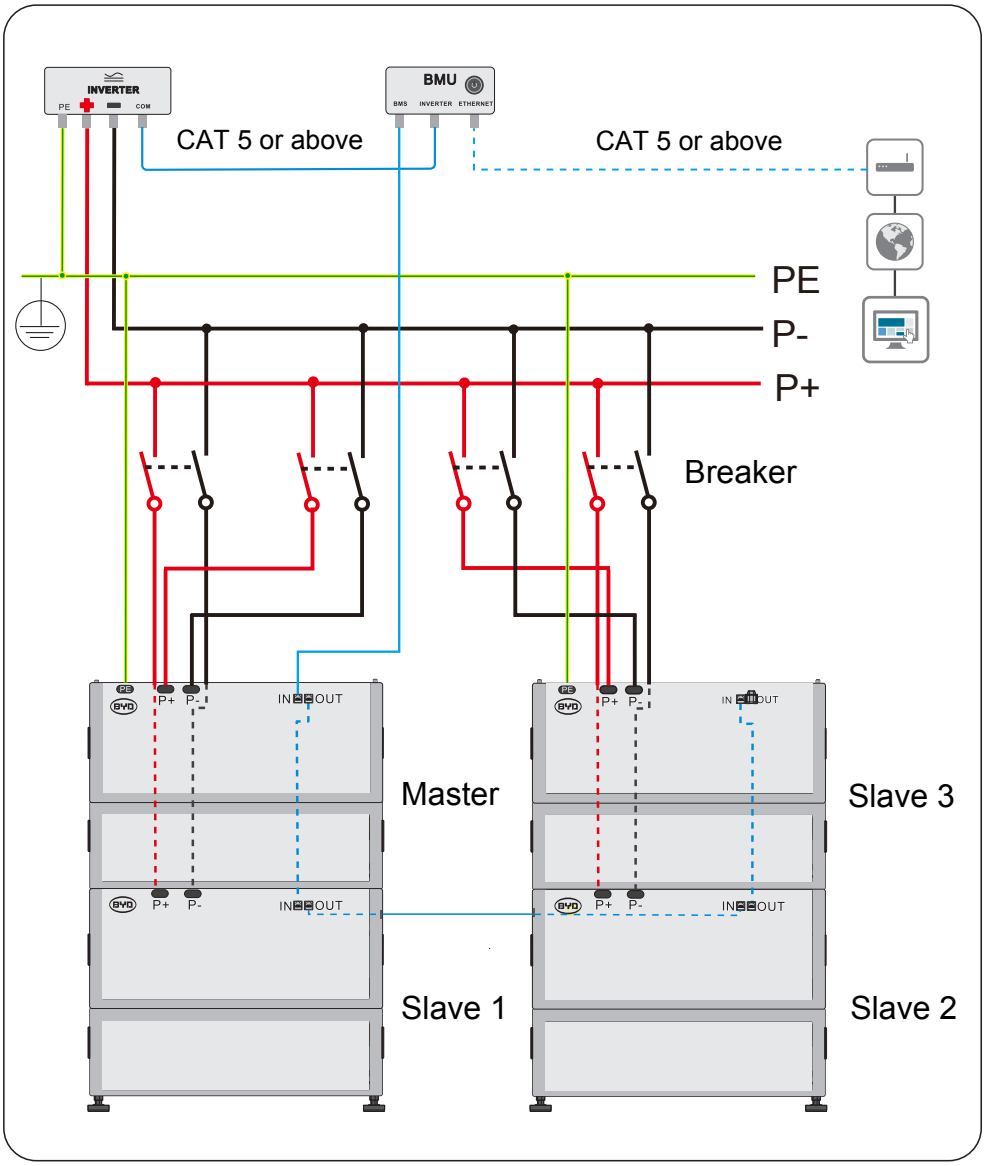

The battery system connected to Slave 1 is appointed as Slave 2, and so on.

* **This manual should be used together with the local standards AS/ NZS 5139 and AS/NZS 3000 wiring rules.**