BYD Battery-Box Pro Installation Guidance

Battery-Box Pro2.5/5.0/7.5/10.0

Version 1.4

Content

1 Foreword

Thank you for choosing BYD products. We are committed to providing you with quality and reliable after sales service

To protect users and the product itself, please kindly read this manual carefully which provides detailed information for product features, structures, operating standards, maintenance and troubleshooting.

Note:

This manual can’ t be taken as basis of requirement for BYD.

BYD reserve the final explanation rights of this manual.

1.1 About this guide

This is the installation guide for the Battery-Box Pro 2.5-10.0 .Users of this device or installers must refer to the installation guide to install and use the product correctly.

1.2 Target Group

This installation guide applies only to the Battery-Box Pro 2.5/5.0/7.5/10.0.

1.3 Additional Information

Specification of the product will change without any notice to customers for the purpose of system improvement.

1.4 Symbols Used

Symbols meanings:

	CAUTION: CAUTION represents hazardous situations which can cause light injury, if ignored.
	NOTICE: NOTICE represents the situations which can cause damage to property, if ignored.
	INFORMATION: INFORMATION provides useful tips for optimum installation and operation of the product.

2 Safety

2.1 Warnings and Notification

Installation environment requirements: Battery-Box Pro 2.5-10.0 is designed for household purposes. For installation, it must be installed in a location complying with IP20 regulation. If the Installation location does not comply with IP20, this may cause product failure and it will not be guaranteed for any related accident or damage.

The Battery-Box Pro system can be installed at altitudes of up to 2000m above Mean Sea Level.

2.2 Safety Guidelines

CAUTION:

Li-ion battery (energy storage unit) inside. When assembling the system, do not intentionally make a short connection between the positive (+) and negative (-) terminals of the Battery-Box Pro 2.5-10.0 with a metallic object.

All works on the Battery-Box Pro 2.5-10.0 and electrical connections must be carried out by qualified personnel only.

Battery-Box Pro 2.5-10.0 provides a safe source of electrical energy when operated as intended and as designed.

Potentially hazardous circumstances such as excessive heat or electrolyte mist may occur under improper operating conditions, damage, misuse and abuse.

The following safety precautions and the warning messages described in this section must be observed. If any of the following precautions are not fully understood, or if you have any questions, contact customer service for guidance. The Safety Section may not include all regulations for your region; personnel working with Battery-Box Pro 2.5-10.0 must review applicable federal, state and local regulations as well as the industry standards regarding this product.

Installation personnel cannot wear watches, etc., to avoid short circuit and accidental damage.

Ensure reliable grounding. Do not reverse the front panel.

CAUTION:

Due to the heavy weight of Battery-Box Pro 2.5~10.0, please use strong packaging and safety protection equipment during transportation, to ensure safety and avoid accidental damage.

When increase battery, power off the battery and other power input first.

Can't use the deformation of the battery.

By checking to verify the installation Settings are correct.

The installation should be clean, flat, dry and waterproof .etc.

Notice:

Skilled personnel recognized

This manual and the tasks and procedures described herein are intended use by skilled workers only. A skilled worker is defined as a trained and qualified electrician or installer who has all of the following skills and experience:

Knowledge of the function principles and operation of on-grid systems.

Knowledge of the dangers and risks associated with installing and using electrical devices and acceptable mitigation methods.

Knowledge of the installation of electrical devices

Knowledge of and adherence to this manual and all safety precautions and best practices.

3 Product Overview

3.1 Product Introduction

Battery-Box Pro 2.5~10.0 as the energy storage parts can be used as off-grid & on-grid energy storage system. It is recommended not to use this device for other than the purpose described in this guidance. The substitute use of this product, random change, and use of components other than sold or recommended by BYD will nullify the product guarantee. The system is ideal easy installation and maintenance.

Overview of BYD Battery-Box Pro2.5-10.0

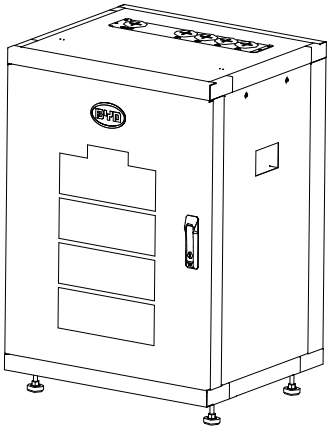

Internal view of BYD Battery-Box Pro2.5-10.0

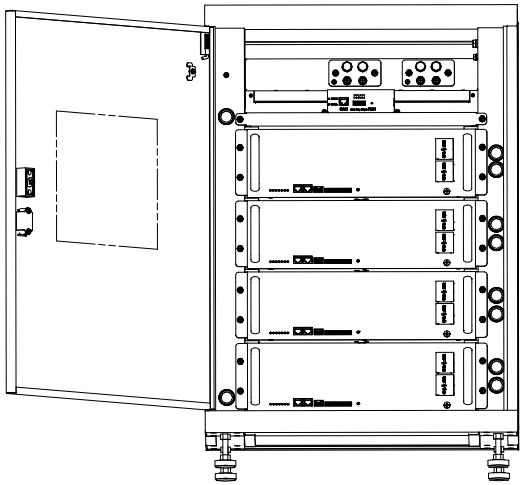

3.2 Cabinet internal terminal introduction

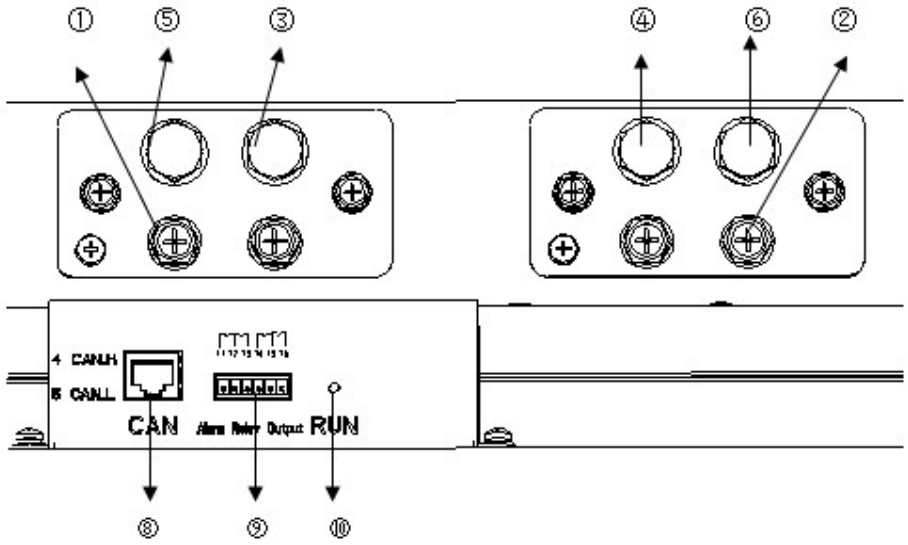

Terminal list

No.	Interface	Mark	Function
①	B+	/	Connect to battery in cabinet, each terminal can connect 1~2 battery
②	B-	/	Connect to battery in cabinet
③	P+	/	Connect to inverter
④	P-	/	Connect to inverter
⑤	P+	/	Connect to another Battery-Box or Combiner box
⑥	P-	/	Connect to another Battery-Box or Combiner box
⑦	Grounded		Connect the grounded cable from battery.
⑧	CAN port RS485	CAN	Connect to inverter CAN port. Update and maintenance
⑨	Dry contact		Dry contact application, output alarm info.
⑩	Run led	Run	Indicate the Plus is running status

3.3 Cable outlet of cabinet

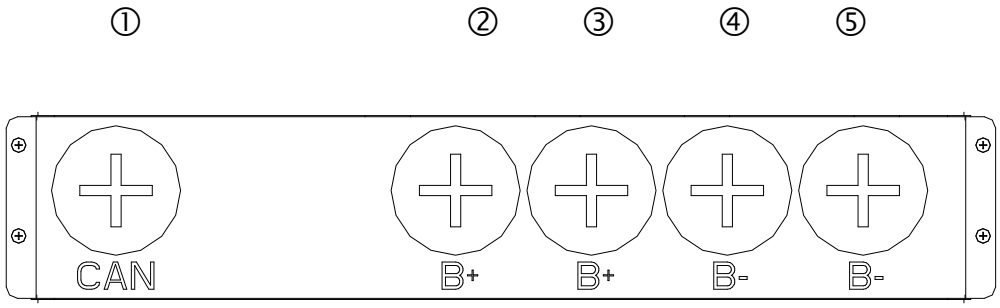

Compare list

No.	Interface	Mark	Function
①	CAN	CAN	CAN communication cable
②	B+	B+	Positive cable from another Battery-Box
③	B+	B+	Positive cable from inverter
④	B-	B-	Negative cable from inverter
⑤	B-	B-	Negative cable from another Battery-Box

3.4 B-Plus L2.5 interface and terminal introduction

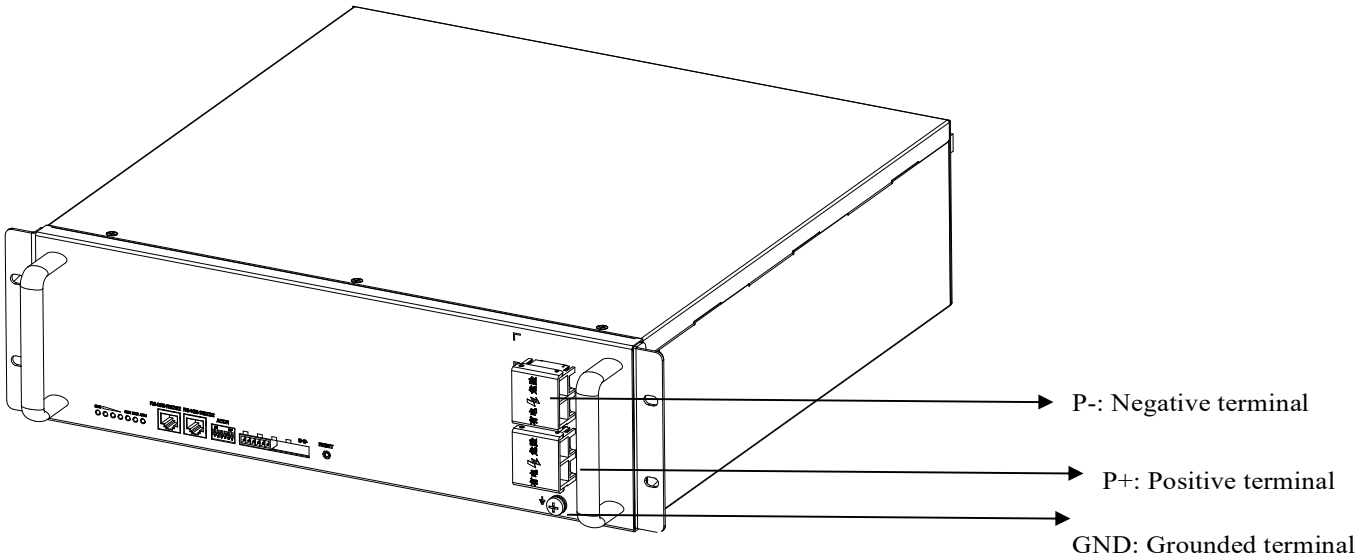

3.5 Display and communicate interface

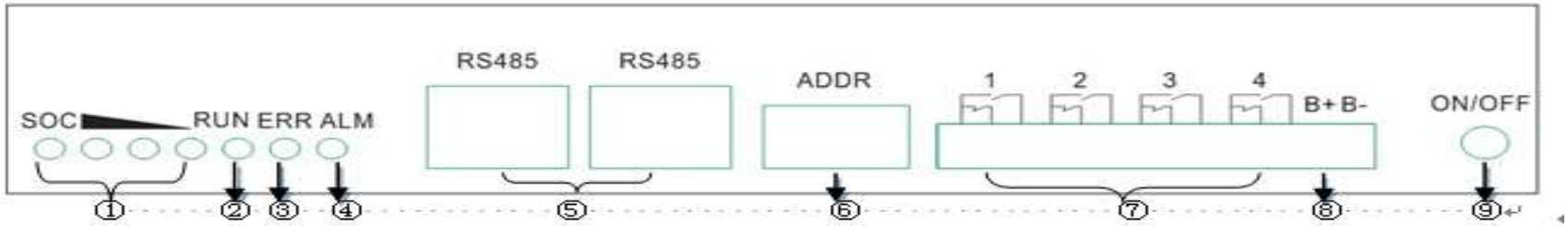

No.	Interface	Mark	Function
①	SOC LED	SOC	Indicates State of capacity of battery
②	RUN LED	RUN	Indicates the B-Plus L 2.5 is running status
③	ERR LED	ERR ADDR	Indicates error status
④	ALM LED	Alarm	Indicates alarm status
⑤	RJ45 terminal	RS485	Communication ports
⑥	Address	ADDR	When parallel connection, this is for setting address.
⑦	Alarm relay output	1.2.3.4	Unused
⑧	Test terminal	B- B+	Measures battery voltage when testing.
⑨	ON/OFF	ON/OFF	Activating of battery when no external powers add on battery.

4 Preparations

4.1 Installation notice

a) There must be no highly flammable or explosive materials nearby.

b) Battery installation location should be away from heat sources and sparks should be avoided. The safety distance should be more than 2m.

c) Battery connection cables should be as short as possible, to prevent excessive line pressure drop.

d) Batteries with different capacity, different types of products or different manufacturers are not allowed for connection.

e) Before conducting the battery, the battery positive and negative poles need to be checked carefully to ensure correct installation.

f) The installation position shall be in a flat place. Use tools with insulated handles.

g) An external Bi-Polar DC isolator between battery and inverter is required during installation

h) Pre-assembled integrated Battery-Box shall not be installed —

(i) in ceiling spaces;

(ii) inside wall cavities;

(iii) on roofs not specifically deemed suitable;

(iv) areas of access/egress;

(v) under stairways; or

(vi) under access walkways.

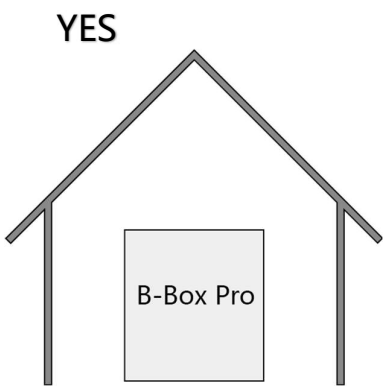

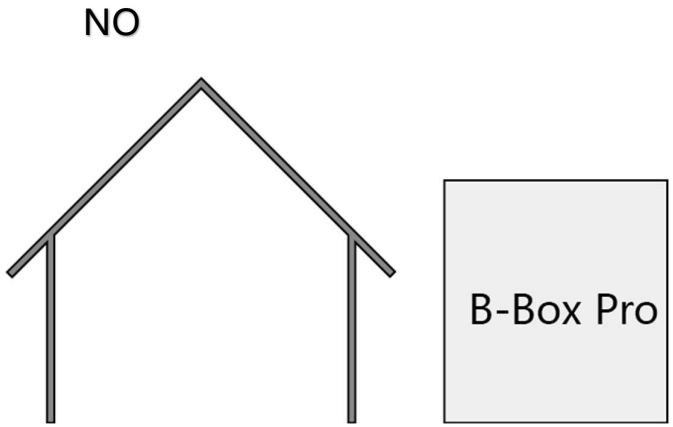

Notice: The BYD Battery-Box Pro must be installed indoors.

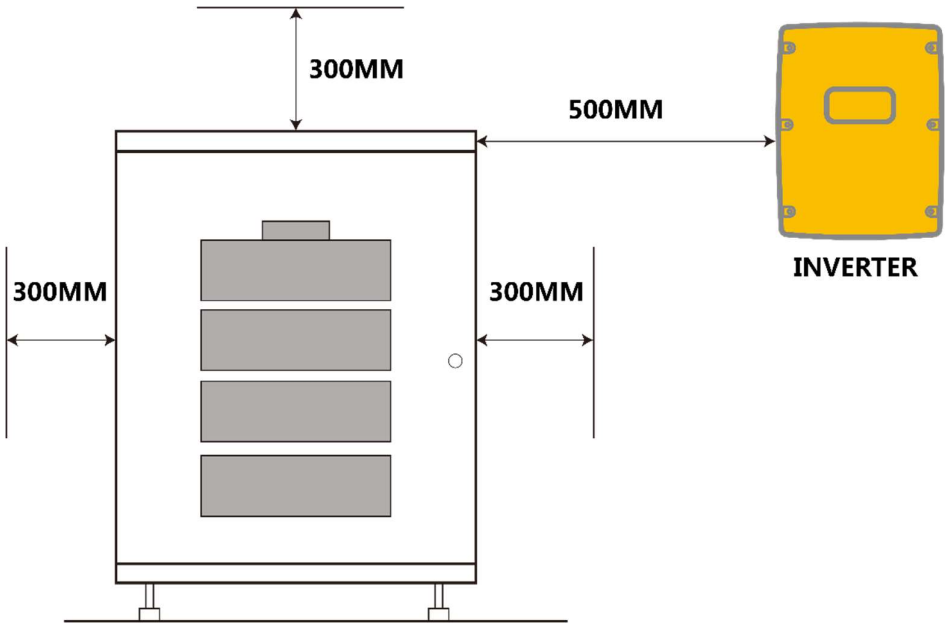

Recommended clearances for the left, right, top of the product is shown in the figure for the proper ventilation and installer convenience.

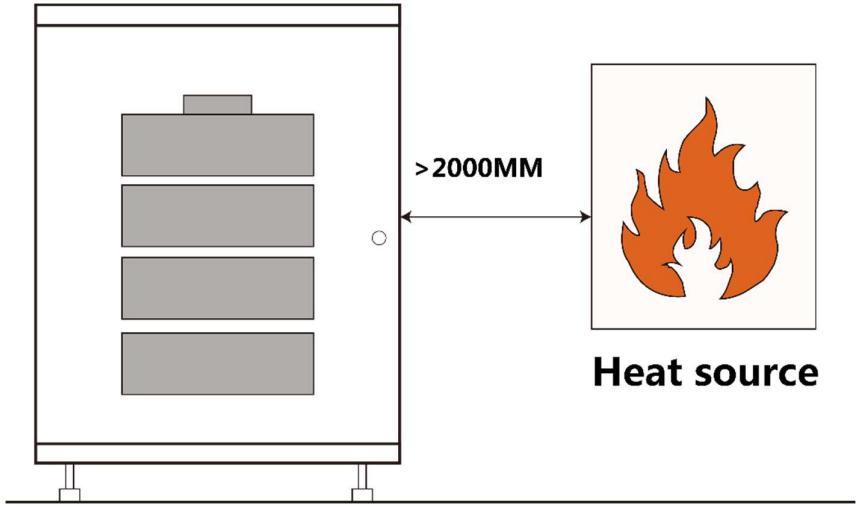

⚠ CAUTION

If the ambient temperature is outside the operating range, the battery pack stops operating to protect itself. Frequent exposure to harsh temperatures may deteriorate the performance and life of the battery pack.

4.2 Package information and system configuration list

The cabinet and battery are packaged separately with cartons, the components are supplied with the cabinet or battery package. Before installation, installers should read the system configuration list.

No.	Item Description	quantity	Purpose	Picture
1	Anchor bolt	4	To allow distance from cabinet to ground.	
2	User Manual	1	System information, operating instructions and warranty items.	\
3	QUICK REFERENCE GUIDE	1	System installation guidance	\
4	Nylon Cable ties	10	Fixed Cable	\
5	Keys	2		

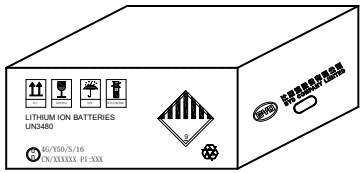

No.	Item Description	quantity	Purpose	Picture
1	Positive cable(brown)	1	Battery P+ connection	
2	Negative cable （Blue）	1	Battery P- connection	
3	GND	1	Connection of battery grounded terminal	
4	Communication cable	1	Battery RS485 port connection	

4.3 Configuration list

Type	Battery-Box Pro 2.5	Battery-Box Pro 5.0	Battery-Box Pro 7.5	Battery-Box Pro 10.0
Battery-Box cabinet	1	1	1	1
B-Plus L 2.5	1	2	3	4
User manual	1	1	1	1
Quick reference guide	1	1	1	1

4.4 Installation Tools

Cross screwdriver

Flat tip screwdriver

Sockets spanner

Diagonal cutters

Adjustable wrench

Knife

4.5 Personal protective equipment

Safety shoes

Insulated gloves

5 Installation

5.1 Unpacking

Tool: Knife

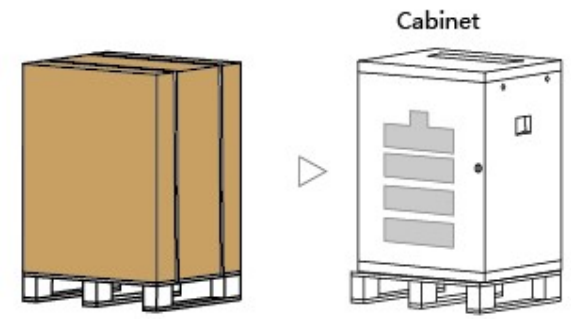

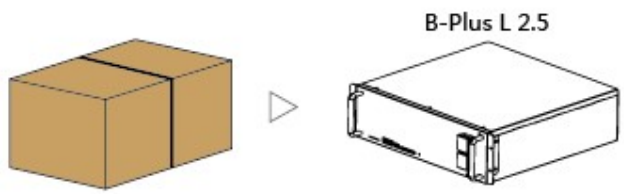

5.2 Disassembling the pallet & anchor bolt installation

Tool: Adjustable spanner fixed torque

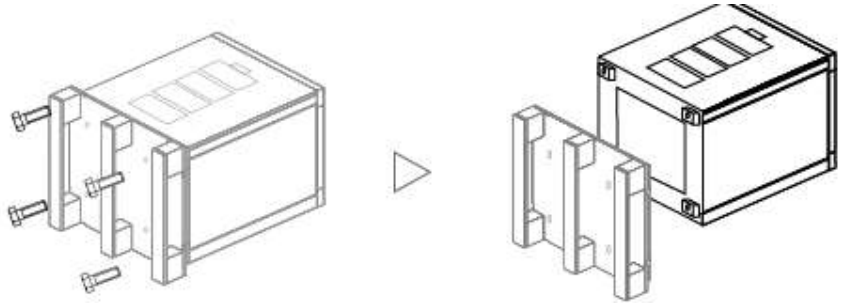

Lay down the cabinet, put some protections on the ground to avoid scratches. Take away the pallet and four screws that installed on the root of the pallet.

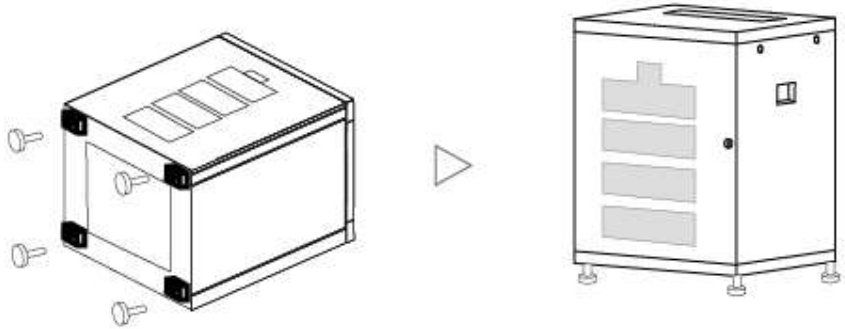

Install the 4pcs anchor bolt into the four hole in bottom of cabinet.

5.3 Connection power cables

Tool: Cross screwdriver

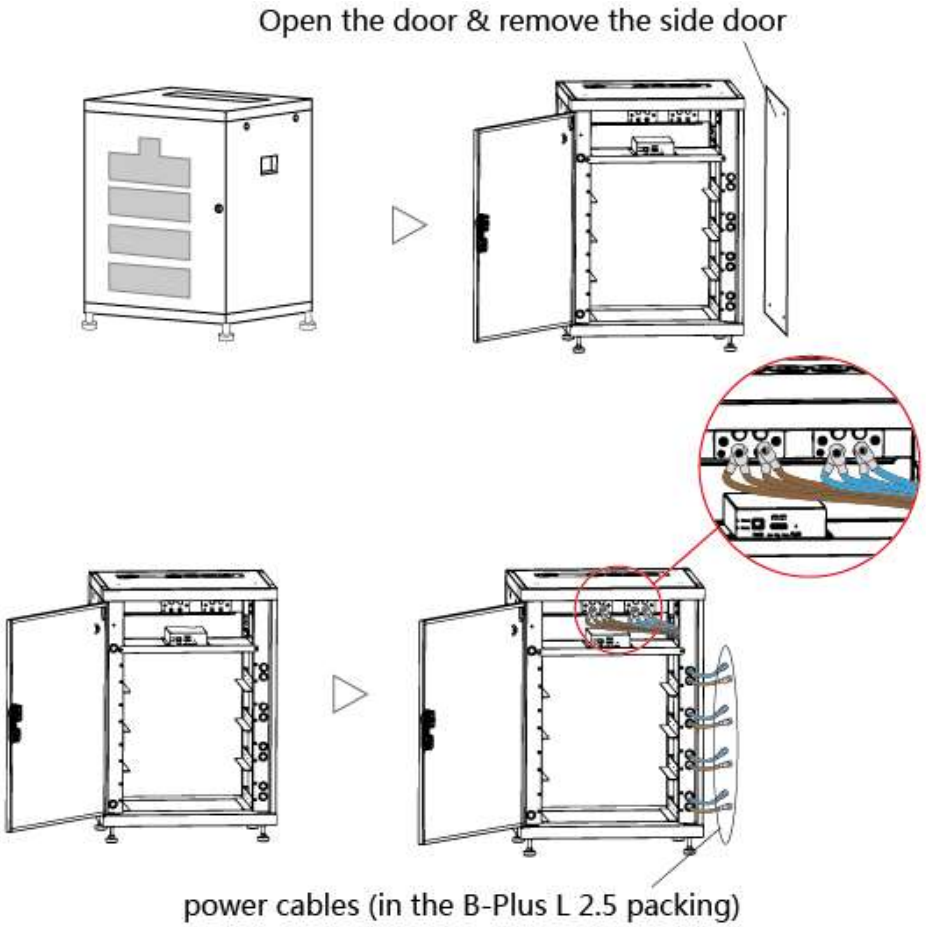

5.4 Battery installation

Tool: Cross screwdriver

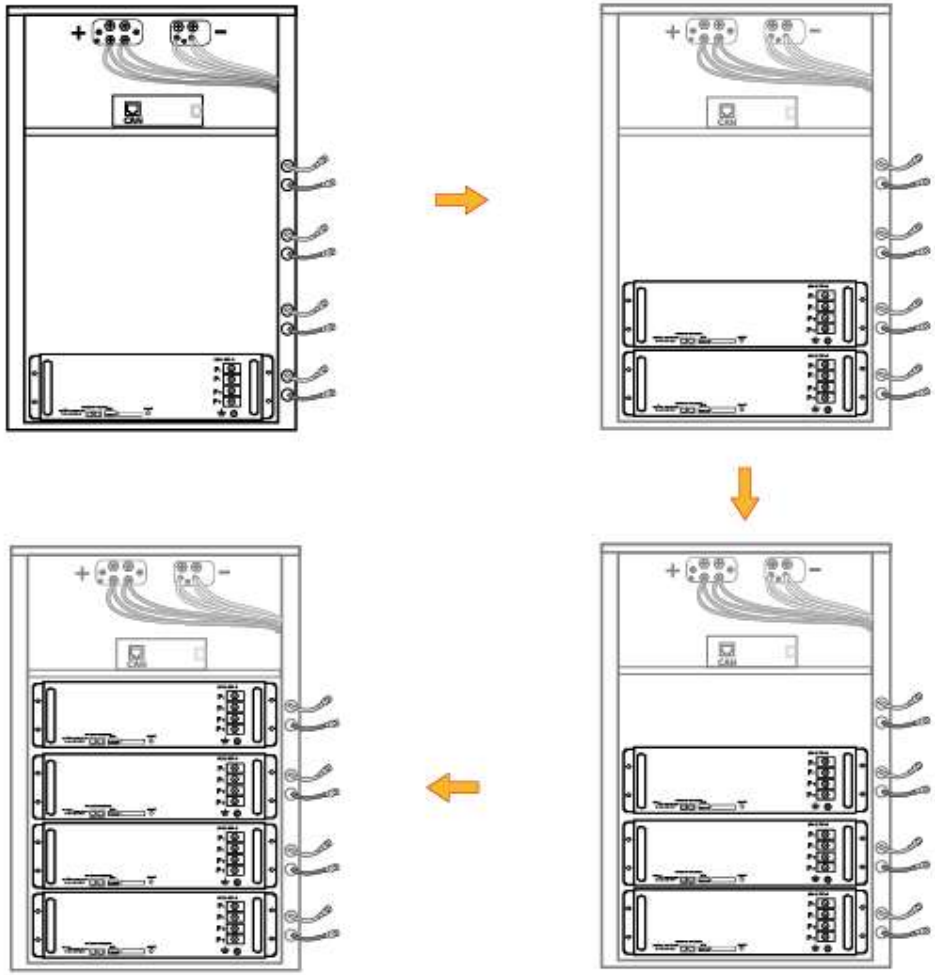

*1 Move the cabinet to the installation place, prepare to install battery.

*2 Open the door, take away the screws of the battery store and front panel. Push the battery into battery store from the bottom, one cabinet can install maximum 4PCS batteries.

*3 Fixing all batteries with screws. Finish battery installation.

5.5 Connecting the power cables to B-Plus L 2.5

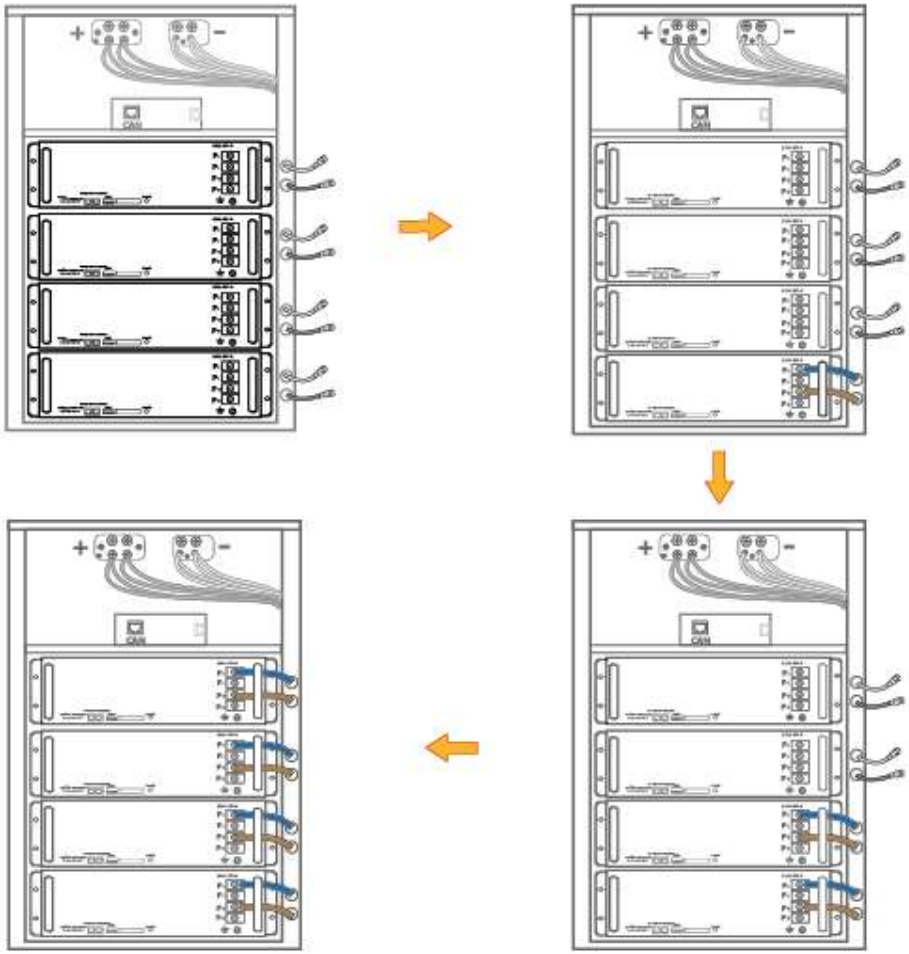

5.6 Connect the grounding & communication cable

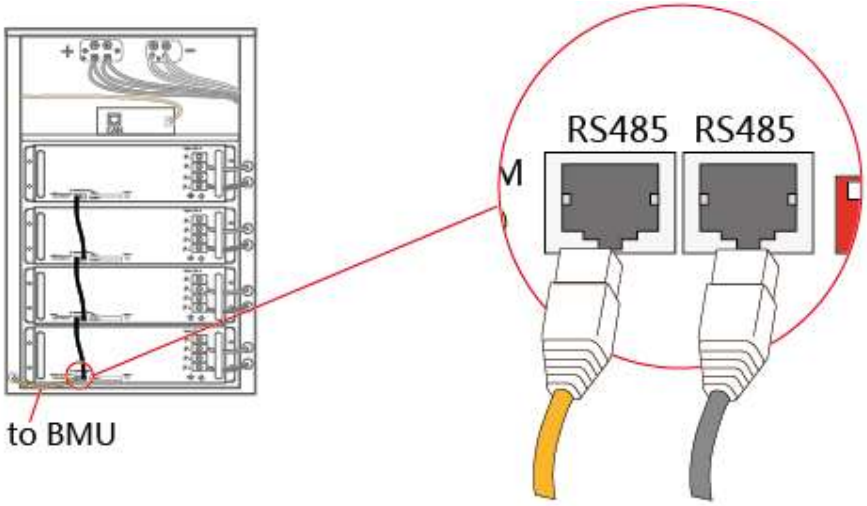

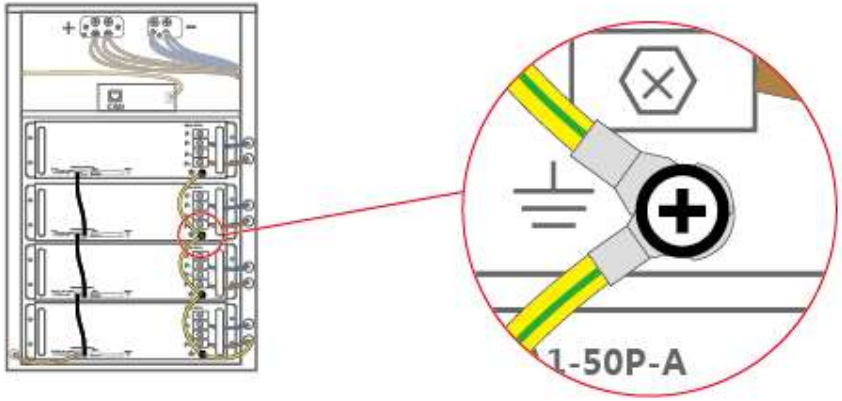

5.7 Setting the battery address

The address of the BMS must start with 1, must be consecutive, can not have 0. Only the BMU with the last address is connected to the inverter.

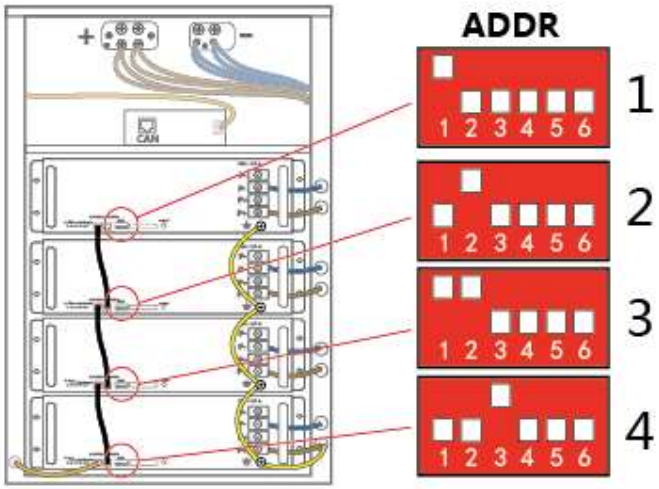

Battery address setting list (from 1~32 batteries)

ADRR	DIP	ADRR	DIP	ADRR	DIP
		11	110100	22	011010
1	100000	12	001100	23	111010
2	010000	13	101100	24	000110
3	110000	14	011100	25	100110
4	001000	15	111100	26	010110
5	101000	16	000010	27	110110
6	011000	17	100010	28	001110
7	111000	18	010010	29	101110
8	000100	19	110010	30	011110
9	100100	20	001010	31	111110
10	010100	21	101010	32	000001

*** Make sure of the last address of B-Plus L 2.5 connect to BMU.**

5.7.1. "ADDR" switch introduction

Function: For communication between battery and BMU. BMU will communicate with external equipment by using CAN communication.

Each DIP switch definition:

There are 6 bit switches, keep the switch on down side means" 0" , turn up the switch to "ON" means "1" .

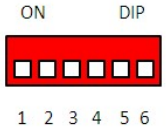

Address: 000000

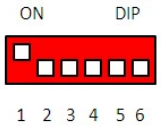

Address: 100000

For example: when two battery in using, "ADDR" setting:

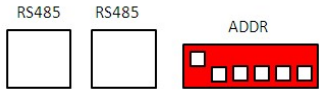

No.1 battery address: 100000

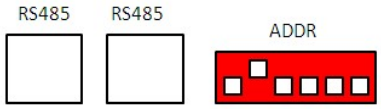

No.2 battery address: 010000

For address setting, please refer to the configuration list.

5.8 Single machine assembly drawing

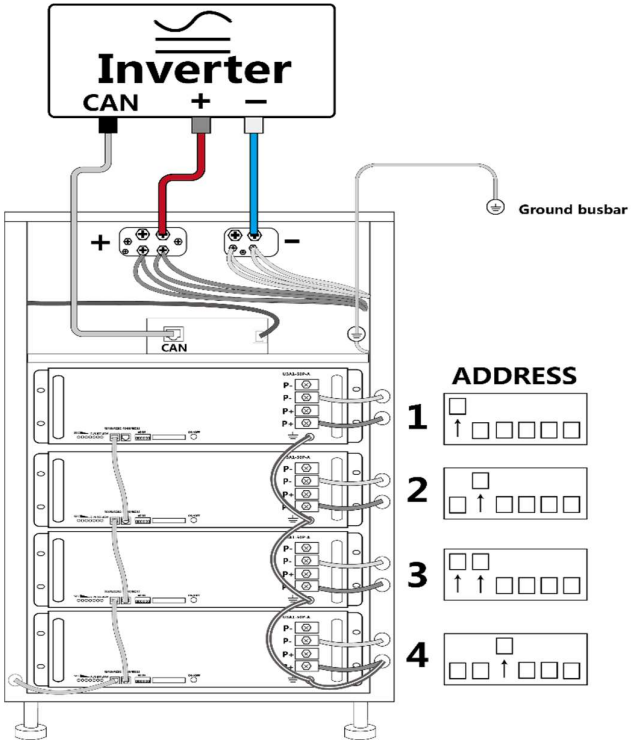

*** CAN connection to see appendix 1.** ***Don not forget to connect the ground cable.**

5.9. Multiple machine assembly drawing.

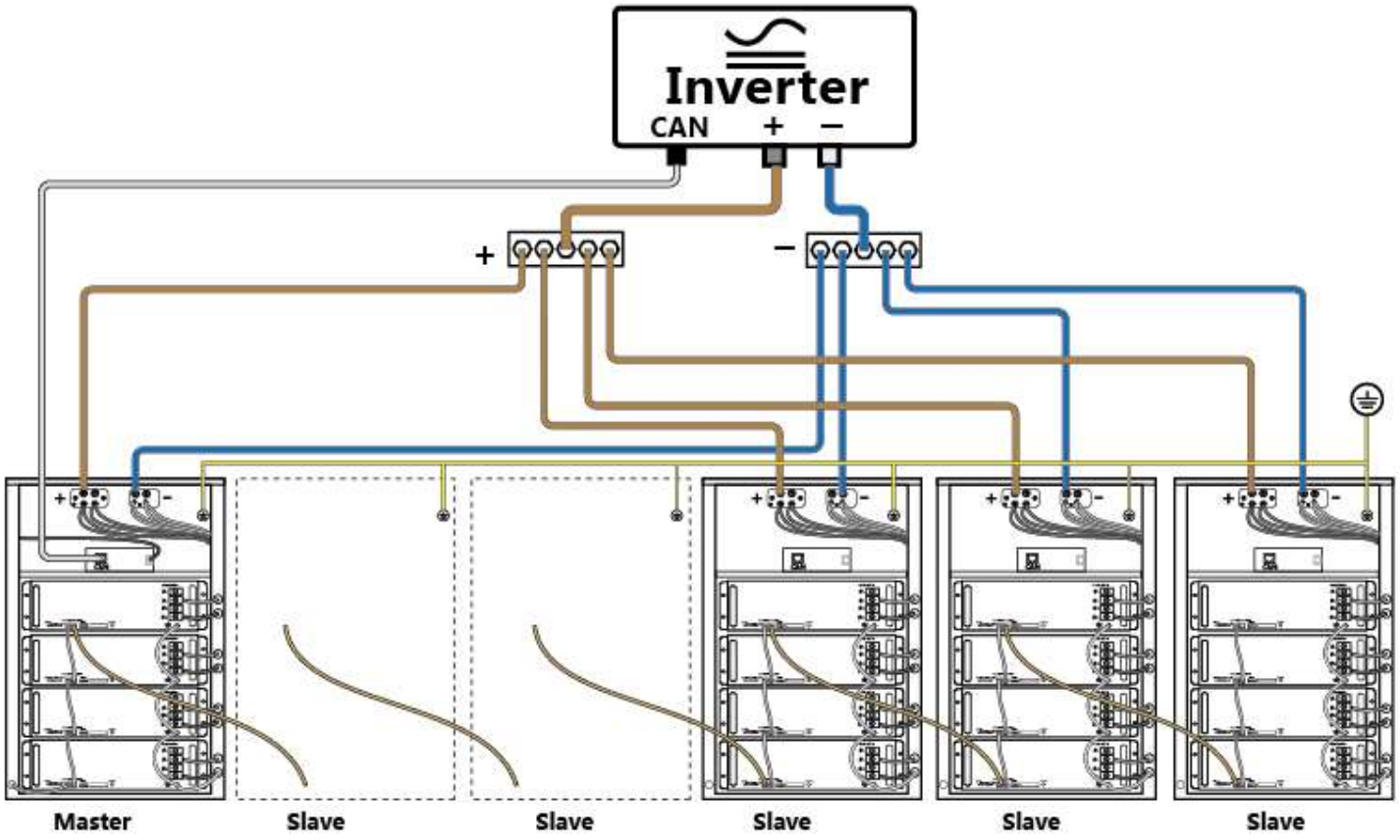

5.10 Checking list

a **Is the power cables connection correct?** ☐ YES / ☐ NO

b **Is the communication cable connected correctly?** ☐ YES / ☐ NO

c **Has the battery's address been set correctly?** ☐ YES / ☐ NO

d **Is the battery reliably grounded?** ☐ YES / ☐ NO

e **Is the inverter set correctly?** ☐ YES / ☐ NO

f **Are the other connections and setting correct?** ☐ YES / ☐ NO

5.11 LED indications

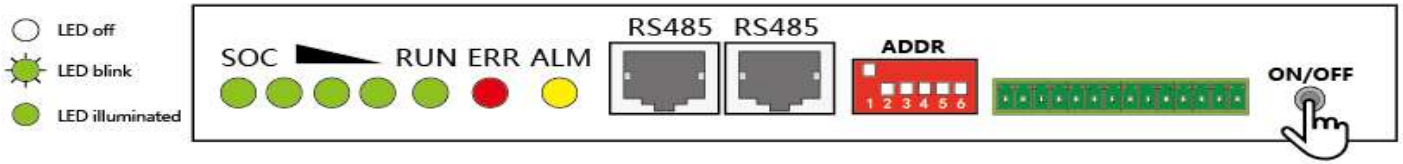

	SOC RUN ERR ALM	description	Statu	Reason	Disposal method
1		all LED was off	Battery off		
2		all LED was blink Lasts 4 seconds.	Battery start-up process		
3		SOC & RUN LED blink fast	Discharging		
4		SOC & RUN LED blink Slow	Charging		
5		SOC & RUN LED illuminated	Idle		
6		SOC & ALM LED illuminated	Protected	There may be short-circuit, over-voltage, over-current, over-temperature, faulty wiring and so on.	Eliminate errors
7		SOC & ERR LED illuminated	System failure	Battery or BMS damage	Contact the after-sales service provider. Replac batteries or BMS
8		SOC LED flashes sequentially from right to left	communication failure	BMS - BMU communication failure or BMU - inverter communication failure	Check communication cable

6 Technical Term and operating environment

Technical Term and operating environment: Please read the Battery-Box Pro 2.5-10.0 user manual carefully.

7 System boot

7.1 Press "ON/OFF" to start the battery

The battery's LED flashes, and after 4 seconds the SOC LED green light and the run green light, the battery is started normally.

* After the system is properly connected, when the number of batteries used is greater than or equal to 2, no matter which battery is turned on first, other batteries will start up at the same time. That is to say, you don't need to turn on the batteries one by one when multiple batteries are in use.

* When multiple cabinets are connected in parallel, if starting one battery does not enable all the batteries to start up, you need to start another battery.

*BMU is powered by battery and does not need to be powered on separately.

7.2 According to inverter manual, start inverter correctly

Turn off all loads before starting the inverter.

7.3 Turn on the load and power in.

Input / output needs to meet battery and inverter ratings.

Ratings can be found in specifications or user manuals.

*Warning: incorrect ordering can cause the system can't work normally or even to be damaged!

*If the system is not working, please turn off the battery before leaving to avoid further damage.

8 System Shutdown

8.1 Isolate the power of loads and input.

8.2 Switch off the inverter according to inverter manual.

8.3 Press the on / off button for 4 or 5 seconds to switch off the battery.

***When the number of batteries used is greater than or equal to 2, you need to shut down all batteries one by one.**

*** BMU is battery powered and does not require a separate shutdown.**

8.4 After stopping the system, please ensure the follows.

a) Confirm all the batteries are powered off.

b) Check all the LEDs are off.

c) Check that the inverter has powered off.

8.5 If you do not intend to use it for a long time, please turn off all battery switches in time and follow the instructions in the user manual for regular charge and discharge maintenance.

Appendix1

CAN cable connection

RJ45 PIN define

	Battery-Box	SMA	GOODWE	VICTRON	SUNGROW	SELECTRONIC	Imeon
CAN H	4	4	4	7	5	1	1
CAN L	5	5	5	8	4	2	2

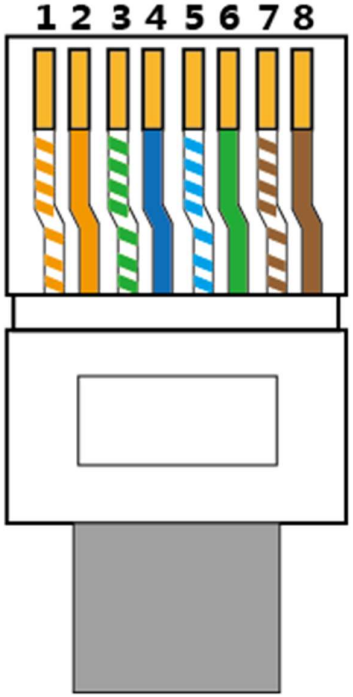

When installers attempt "CAN" ports connections between Battery-Box Pro 2.5-10.0 and inverter, please refer to below drawing.

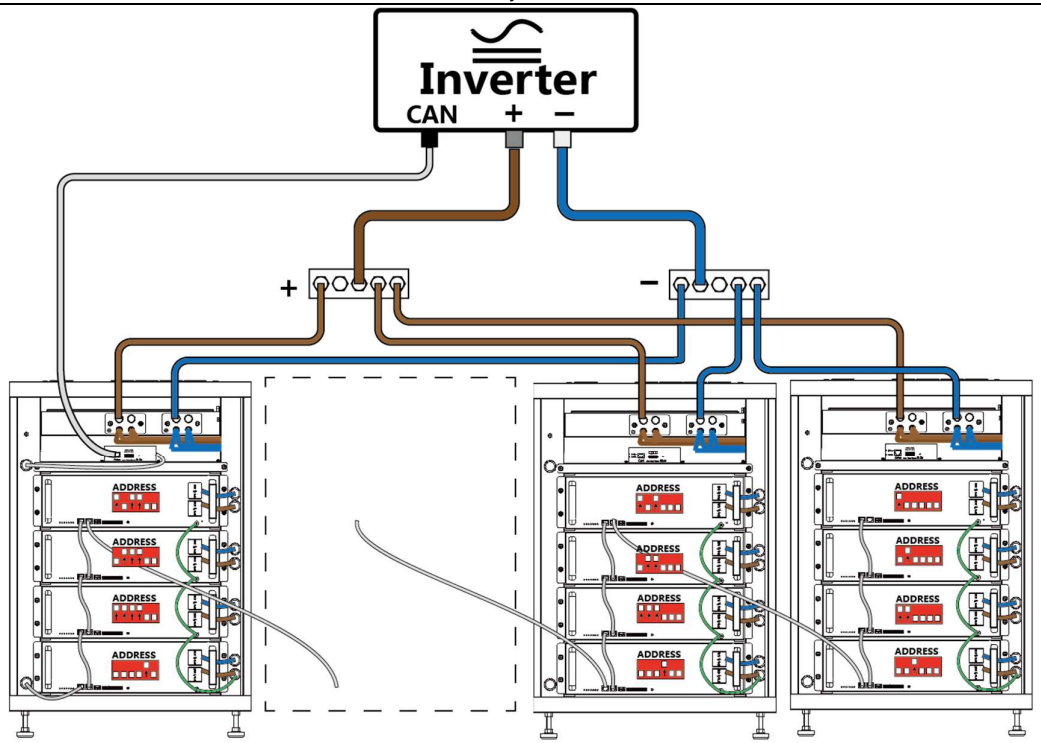

The address of the BMS must start with 1, must be consecutive, can not have 0.
Only the BMU with the last address is connected to the inverter.

Appendix 2

List of matched inverter vendors

Serial number	Name
1	SMA
2	GOODWE
3	Victron
4	Sungrow
5	Selectronic
6	Imeon

1. **System activating procedures when BYD Battery-Box Pro connect to SMA Sunny Island.**

(1) Running the BYD Battery-Box Pro

Activate all of the B-Plus L 2.5

Tips: Pressing "ON/OFF" button one second will start the B-Plus L 2.5, according to the number of inverters in the following table, activate the batteries as fast as possible within 8 seconds

	Inverter:1~2PCS	**Inverter:3~4PCS**	**Inverter:5~7PCS**	**Inverter:8~9PCS**
The amount of battery	1	2	3	4

Once start, the LED lights of B-Plus L 2.5 will flash in various forms according to the battery status, as below:

LED status when normal start

Item	**LED**	**Status**
1	Run	Green
2	SOC	More than one is green. Slow blink is charging and fast blink is discharging. The merry-go-round means no communication.
3	ERROR	OFF
4	Alarm	OFF

	Status(display interval 2S)	Definition
LED(BMU)	Blinks 1 time	Inverter not connected
	Blinks 2 time	Battery not connected
	Blinks 3 time	Battery disconnected
	Blinks 4 time	Battery failure

Remark:

Slow blink: indicator light is on and off every 1s (0.5Hz).

Fast blink: indicator light is on and off every 0.25s (2HZ)

SOC status and indicate

Item	Status	Indicate
1	Four lights are all normally on	Capacity is 100%-75% (including)
2	The last three lights are normally on	Capacity is 74%-50% (including)
3	The last two lights are normally on	Capacity is 49%-25% (including)
4	The last one light is normally on	Capacity is 24%-1% (including)

(2) Switching on the Sunny Island;

Procedure:

• For systems with one Sunny Island, press the "On" button on the Sunny Island.

☑ the inverter LED on each Sunny Island inverter is glowing orange and the Sunny Island inverters are in standby.

(3) Running the inverter;

Procedure:

• Press the start-stop button on the Sunny Island and hold it until an acoustic signal sounds. Or press and hold the button on the Sunny Remote Control until an acoustic signal sounds. ☑ The inverter LED on each Sunny Island is glowing green.

(4) Setting the battery parameters on SRC of inverter;

Please refer to the "Battery Parameter setting" table in Appendix1.

Remark: If the battery capacity is greater than or equal to 200AH, according to the Battery-Box10.0 parameter settings

(5) System is running.

Notice: The battery parameter settings on the inverter are shown in Appendix 3.

2. System activating procedures when BYD Battery-Box Pro connects to GOODWE inverter.

(1) Download the APP on cell phone and open the home page;

(2) Start BYD Battery-Box Pro;

Press the "ON/OFF" button on front panel of B-Plus L 2.5;

Tips: Press one second will start the B-Plus;

Once start, the LED lights of B-Plus L 2.5 will flash in various forms according to the battery status, as below:

LED status when normal start

Item	LED	Status
1	Run	Green
2	SOC	More than one is green. Slow blink is charging and Fast blink is discharging. The merry-go-round means no communication.
3	ERROR	OFF
4	Alarm	OFF

	Status(display interval 2S)	Definition
LED(BMU)	Blinks 1 time	Inverter not connected
	Blinks 2 time	Battery not connected
	Blinks 3 time	Battery disconnect
	Blinks 4 time	Battery failure

Remark:

Slow blink: indicator light is on and off every 1s (0.5Hz).

Fast blink: indicator light is on and off every 0.25s (2HZ)

SOC status and indicate

Item	Status	Indicate
1	Four lights are all normally on	Capacity is 100%-75% (including)
2	The last three lights are normally on	Capacity is 74%-50% (including)
3	The last two lights are normally on	Capacity is 49%-25% (including)
4	The last one light is normally on	Capacity is 24%-1% (including)

(3)Go to the home page of the APP, enter into the Battery Settings page, select "BYD Battery-Box" battery, then select "NEXT" until the last page, finally select "Start".

Remark: If the installed capacity is greater than or equal to 10.0KWh, please choose the product model as "BYD Battery-Box 10" in the App

(4) System is running.

Notice: The battery parameter settings on the inverter are shown in Appendix 3.

3. System activating procedures when BYD Battery-Box Pro connects to Victron inverter.

(1) Start inverter;

(2) Set the battery DOD at a minimum of 5% on-grid; Set the battery DOD at a minimum of 10% off-grid.

(3) Start BYD Battery-Box Pro;

Press the "ON/OFF" button on front panel of B-Plus L 2.5;

Tips: Press "ON/OFF" button one second will start B-Plus L 2.5, activate the batteries as fast as possible within 8 seconds according to the number of inverters in the following table.

	Inverter:1~2PCS	**Inverter:3~4PCS**	**Inverter:5~7PCS**	**Inverter:8~9PCS**
The amount of battery	1	2	3	4

Once start, the LED lights of B-Plus L 2.5 will flash in various forms according battery status, as below:

LED status when normal start

Item	LED	Status
1	Run	Green
2	SOC	More than one is green. Slow blink is charging and fast blink is discharging. The ferry-go-round means no communication.
3	ERROR	OFF
4	Alarm	OFF

	Status(display interval 2S)	Definition
LED(BMU)	Blinks 1 time	Inverter not connected
	Blinks 2 time	Battery not connected
	Blinks 3 time	Battery disconnect
	Blinks 4 time	Battery failure

Remark:

Slow blink: indicator light is on and off every 1s (0.5Hz).

Fast blink: indicator light is on and off every 0.25s (2HZ)

SOC status and indicate

Item	Status	Indicate
1	Four lights are all normally on	Capacity is 100%-75% (including)
2	The last three lights are normally on	Capacity is 74%-50% (including)
3	The last two lights are normally on	Capacity is 49%-25% (including)
4	The last one light is normally on	Capacity is 24%-1% (including)

(4) System is running.

Notice: The battery parameter settings on the inverter are shown in Appendix 3.

4. System activating procedures when BYD Battery-Box Pro connect to SUNGROW SH5K.

(1) Running the BYD Battery-Box Pro

Activate all of the B-Plus L 2.5

Tips: Pressing "ON/OFF" button one second will start the B-Plus L 2.5, according to the number of inverters in the following table, activate the batteries as fast as possible within 8 seconds

	Inverter:1~2PCS	**Inverter:3~4PCS**	**Inverter:5~7PCS**	**Inverter:8~9PCS**
The amount of battery	1	2	3	4

Once start, the LED lights of B-Plus L 2.5 will flash in various forms according to the battery status, as below:

LED status when normal start

Item	**LED**	**Status**
1	Run	Green
2	SOC	More than one is green. Slow blink is charging and fast blink is discharging. The merry-go-round means no communication.
3	ERROR	OFF
4	Alarm	OFF

	Status(display interval 2S)	**Definition**
LED(BMU)	Blinks 1 time	Inverter not connected
	Blinks 2 time	Battery not connected
	Blinks 3 time	Battery disconnected
	Blinks 4 time	Battery failure

Remark:

Slow blink: indicator light is on and off every 1s (0.5Hz).

Fast blink: indicator light is on and off every 0.25s (2HZ)

SOC status and indicate

Item	Status	Indicate
1	Four lights are all normally on	Capacity is 100%-75% (including)
2	The last three lights are normally on	Capacity is 74%-50% (including)
3	The last two lights are normally on	Capacity is 49%-25% (including)
4	The last one light is normally on	Capacity is 24%-1% (including)

(2) Switching on and running the SUNGROW SH5K;

The LCD display panel with two indicators and four buttons is on the front of the inverter.

LED indicators "RUN" and "FAULT", from which user can know the current state. Buttons User can operate the LCD menu via the four buttons.

a) Rotate the DC switch to "ON". The DC switch may be integrated in SH5K or installed by the customer.

b) The LCD screen will be activated 5s later and enter the initial settings.

Please refer to the inverter user manual for parameter settings of the inverter.

(3) Setting the battery parameters on of inverter;

The battery parameter settings on the inverter are shown in Appendix 3.

Remark: If the battery capacity is greater than or equal to 200AH, according to the Battery-Box10.0 parameter settings

(5) System is running.

5. System activating procedures when BYD Battery-Box Pro connect to Selectronic.

(1) Running the BYD Battery-Box Pro

Activate all of the B-Plus L 2.5

Tips: Pressing "ON/OFF" button one second will start the B-Plus L 2.5, according to the number of inverters in the following table, activate the batteries as fast as possible within 8 seconds

	Inverter:1~2PCS	**Inverter:3~4PCS**	**Inverter:5~7PCS**	**Inverter:8~9PCS**
The amount of battery	1	2	3	4

Once start, the LED lights of B-Plus L 2.5 will flash in various forms according to the battery status, as below:

LED status when normal start

Item	LED	Status
1	Run	Green
2	SOC	More than one is green. Slow blink is charging and fast blink is discharging. The merry-go-round means no communication.
3	ERROR	OFF
4	Alarm	OFF

	Status(display interval 2S)	Definition
LED(BMU)	Blinks 1 time	Inverter not connected
	Blinks 2 time	Battery not connected
	Blinks 3 time	Battery disconnected
	Blinks 4 time	Battery failure

Remark:

Slow blink: indicator light is on and off every 1s (0.5Hz).

Fast blink: indicator light is on and off every 0.25s (2HZ)

SOC status and indicate

Item	Status	Indicate
1	Four lights are all normally on	Capacity is 100%-75% (including)
2	The last three lights are normally on	Capacity is 74%-50% (including)
3	The last two lights are normally on	Capacity is 49%-25% (including)
4	The last one light is normally on	Capacity is 24%-1% (including)

(2) Switching on the Selectronic;

Procedure:

• For systems with one Selectronic; press the "On" button on the Selectronic;.

Download SPLINK program from the Selectronic Web site and install it on a Windows PC. Windows XP, Vista, 7 and 10 are supported. Connect the inverter to the computer and set the parameters of the inverter and battery through the SPLINK program.

Notice: The battery parameter settings on the inverter are shown in Appendix 3.

(3) System is running.

6. System activating procedures when BYD Battery-Box Pro connect to Imeon.

(1) Running the BYD Battery-Box Pro

Activate all of the B-Plus L 2.5

Tips: Pressing "ON/OFF" button one second will start the B-Plus L 2.5, according to the number of inverters in the following table, activate the batteries as fast as possible within 8 seconds

	Inverter:1~2PCS	**Inverter:3~4PCS**	**Inverter:5~7PCS**	**Inverter:8~9PCS**
The amount of battery	1	2	3	4

Once start, the LED lights of B-Plus L 2.5 will flash in various forms according to the battery status, as below:

LED status when normal start

Item	**LED**	**Status**
1	Run	Green
2	SOC	More than one is green. Slow blink is charging and fast blink is discharging. The merry-go-round means no communication.
3	ERROR	OFF
4	Alarm	OFF

	Status(display interval 2S)	**Definition**
LED(BMU)	Blinks 1 time	Inverter not connected
	Blinks 2 time	Battery not connected
	Blinks 3 time	Battery disconnected
	Blinks 4 time	Battery failure

Remark:

Slow blink: indicator light is on and off every 1s (0.5Hz).

Fast blink: indicator light is on and off every 0.25s (2HZ)

SOC status and indicate

Item	Status	Indicate
1	Four lights are all normally on	Capacity is 100%-75% (including)
2	The last three lights are normally on	Capacity is 74%-50% (including)
3	The last two lights are normally on	Capacity is 49%-25% (including)
4	The last one light is normally on	Capacity is 24%-1% (including)

(2) Switching on the Imeon;

Procedure:

• For systems with one Imeon; press the "On" button on the Imeon;.

Battery type selection and SOC parameter settings can be made on the Imeon inverter web page via mobile phone, tablet or computer

Notice: The battery parameter settings on the inverter are shown in Appendix 3.

(3) System is running.

Appendix 3

Parameter setting

1 SMA charger min capacity

On Grid Single Phase	**Charging the battery Usage through battery backup system without increased self-consumption**					
		Battery-Box Pro 2.5	Battery-Box Pro 5.0	Battery-Box Pro 7.5	Battery-Box Pro 10.0	Battery-Box Pro 13.8
	Parameters	Setup value	Setup value	Setup value	Setup value	Setup value
	003.07Batt Typ	Li Lon_Ext-BMS	Li Lon_Ext-BMS	Li Lon_Ext-BMS	Li Lon_Ext-BMS	Li Lon_Ext-BMS
	003.10Batt Cpynom	50	100	150	200	250
	262.01ProtResSOC	3	3	3	3	3
	262.02BatResSOC	10	7	6	6	6
	1.Charging the battery usage through battery backup system with increased self-consumption **2.Charging the battery usage through system for increased self-consumption without a battery backup grid**					
		Battery-Box Pro 2.5	Battery-Box Pro 5.0	Battery-Box Pro 7.5	Battery-Box Pro 10.0	Battery-Box Pro 13.8
	Parameters	Setup value	Setup value	Setup value	Setup value	Setup value
	003.07Batt Typ	Li Lon_Ext-BMS	Li Lon_Ext-BMS	Li Lon_Ext-BMS	Li Lon_Ext-BMS	Li Lon_Ext-BMS
	003.10Batt Cpynom	50	100	150	200	250
	261.01SlfCsmpIncEna	Enable	Enable	Enable	Enable	Enable
	261.03Saisonenable	Yes	Yes	Yes	Yes	Yes
	262.01ProtResSOC	3	3	3	3	3
	262.02BatResSOC	6	4	4	4	4
	262.03BUResSOC	0	0	0	0	0
	262.04PVResSOC	8	6	4	4	4
	262.05MinSlfCsmpSOC	75	80	85	85	85

On Grid Three Phase	**Charging the battery Usage through battery backup system without increased self-consumption**				
		Battery-Box Pro 5.0	Battery-Box Pro 7.5	Battery-Box Pro 10.0	Battery-Box Pro 13.8
	Parameters	Setup value	Setup value	Setup value	Setup value
	003.07Batt Typ	Li Lon_Ext-BMS	Li Lon_Ext-BMS	Li Lon_Ext-BMS	Li Lon_Ext-BMS
	003.10Batt Cpynom	150	150	200	250
	262.01ProtResSOC	3	3	3	3
	262.02BatResSOC	15	10	10	9
	1.Charging the battery usage through battery backup system with increased self-consumption 2.Charging the battery usage through system for increased self-consumption without a battery backup grid				
		Battery-Box Pro 5.0	Battery-Box Pro 7.5	Battery-Box Pro 10.0	Battery-Box Pro 13.8
	Parameters	Setup value	Setup value	Setup value	Setup value
	003.07Batt Typ	Li Lon_Ext-BMS	Li Lon_Ext-BMS	Li Lon_Ext-BMS	Li Lon_Ext-BMS
	003.10Batt Cpynom	150	150	200	250
	261.01SlfCsmplncEna	Enable	Enable	Enable	Enable
	261.03Saisonenable	Yes	Yes	Yes	Yes
	262.01ProtResSOC	3	3	3	3
	262.02BatResSOC	9	6	6	6
	262.03BUResSOC	0	0	0	0
	262.04PVResSOC	8	8	8	6
	262.05MinSlfCsmpSOC	70	75	75	80

	Protection for the Battery		Application
Off Grid	Parameters	Recommended Value	Battery-Box Pro 2.5/5.0/7.5/10.0
	223.05 BatPro1Soc	12%	
	223.06 BatPro2Soc	12%	
	223.07 BatPro3Soc	3%	
	Gen Autostart Control		
	Parameters	Recommended Value	
	235.03 GnSocTm1Str	17%	
	235.04 GnSocTm1Stp	35%	

2 GOODWE Charger Min Capacity:

Battery type selection and discharge of depth parameters are set by GOODWE inverter APP.

Select the battery module: Battery-Box Pro/Res 2.5 or Battery-Box Pro/Res 5.0 or Battery-Box Pro/Res 7.5+.

	Battery-Box Pro 2.5	Battery-Box Pro 5.0	Battery-Box Pro 7.5	Battery-Box Pro 10.0
Depth of discharge	80%	85%	85%	85%
Forced charge	SOC<5%;			

3 SUNGROW Charger Min Capacity

Battery type selection and depth of discharge parameters are set via the Solis inverter operator panel.

Select the battery module: Li-ion BYD.

Tot Cap (KWh): Write the actual capacity of the battery module here

	Battery-Box L Pro 2.5	Battery-Box Pro 5.0	Battery-Box Pro 7.5	Battery-Box Pro 10.0
Reserved SOC	This parameter can be set by the user on the inverter according to actual needs.			

4 VICTRON Charger Min Capacity

Battery type selection and depth of discharge parameters are set via the VICTRON inverter operator panel.

Select the battery module: Li-ion BYD.

Parameters	Battery-Box L Pro 2.5	Battery-Box Pro 5.0	Battery-Box Pro 7.5	Battery-Box Pro 10.0
Minimum discharge SOC	10%	10%	10%	10%

5 IMEON Charger Min Capacity

Battery type selection and SOC min parameters are set by IMEON web.

Select the battery module: BYD-B-Box .

Parameters	Battery-Box Pro 2.5	Battery-Box Pro 5.0	Battery-Box Pro 7.5	Battery-Box Pro 10.0
SOC min without grid	15%	15%	15%	10%
SOC min with grid	15%	15%	15%	10%

Headquarter

China

BYD LITHIUM BATTERY Co., LTD

Address: No.1 Baoping Road, Baolong Industrial Town, Longgang Shenzhen, 518116, China

Tel: +86 0755 89888888

E-Mail: eubatterygrp@byd.com

Fax: 0755-8961 9653

Local Contacts

Australia

ALPS POWER PTY LTD

Address: 14/47-51 Lorraine St Peakhurst NSW 2210

Tel: +61 2 8005 6688

Email: service@alpspower.com.au

Website: www.alpspower.com.au

Europe

EFT-Systems GmbH

Tel: +49 9352 8523999

E-Mail: service@eft-systems.de

Website: www.eft-systems.de

UK

Storing Renewable Energy

Tel: +44 (0) 2037695998

E-Mail: info@srenergy.co.uk

Website: www.srenergy.co.uk